NERC
NORTH AMERICAN ELECTRIC RELIABILITY CORPORATION

Industry Webinar

Reactive Power Planning

NERC System Analysis and Modeling Subcommittee (SAMS)
March 2017

RELIABILITY | ACCOUNTABILITY

Webinar Topics

- Reliability Guideline on Reactive Power Planning
- Webinar Topics
  - Fundamentals of reactive power planning
  - Relevant FERC Orders and NERC Reliability Standards
  - Reactive Power Analysis Timeframes
  - Reactive Power Assessment Techniques
  - Reactive Power Coordination
  - Industry Practices
- Goals:
  - Share takeaways from Reliability Guideline on Reactive Power Planning
  - Provide examples of reactive power planning practices
  - Update industry on efforts underway in the NERC SAMS

NERC SAMS

- SAMS webpage
- Purpose: support development and advancement of system analysis and modeling tools, techniques, and capabilities in planning for the reliability and operational security of the BPS
- Key Focus Areas
  - Develop technical reference materials
  - Identify emerging issues and evaluate new analysis techniques
  - Promote coordination between NERC Regions
  - Share lessons learned within industry
  - Support improvement of interconnection-wide models
  - Coordinate with industry experts and industry groups
- Chair: Michael Lombardi, NPCC

Speakers

- Ryan Quint – *NERC*
- Bill Harm – *PJM*
- Rich Kowalski – *ISO-NE*
- John Simonelli – *ISO-NE*
- Gary Brownfield – *Ameren*
- Jose Conto – *ERCOT*
- Durgesh Manjure – *MISO*

Background,
Relevant FERC Orders,
and
NERC Reliability Standards

Background

- NERC Project 2008-01 Voltage and Reactive Control
  - Initiated to address FERC Order 693 (¶ 1860-1880)
- Documents produced:
  - Reactive Support and Control White Paper – NERC TIS (approved 6/09)
  - SAR to modify VAR-001 and VAR-002 standards
- Additional recommendations to address planning horizon issues forwarded to the TPL SDT

VAR-001-4.1

- Ensures that voltage levels, reactive flows, and reactive resources are monitored, controlled, and maintained within limits in real-time to protect equipment and reliable operation
- TOPs:
  - Specify system-wide voltage schedule
  - Schedule sufficient reactive resources to regulate voltage for normal and contingency conditions
  - Operate and direct operation of devices to regulate voltage and reactive power flows
  - Develop criteria for exemptions to automatic voltage control mode
  - Specify voltage or reactive schedule for generation

VAR-002-4

- Ensures generators provide reactive support and voltage control in order to protect equipment and maintain reliable operation
- GOPs:
  - Operate generators connected to transmission system in automatic voltage control mode, or other mode as instructed by TOP
  - Maintain TOP's voltage or reactive schedule, unless GOP is exempted
  - Notify TOP of any changes in status of voltage control
  - Notify TOP of changes in reactive capability

TPL-001-4

- Reactive planning is critical component of TPL standard
- PC establishes:
  - Acceptable steady-state voltage limits
  - Post-contingency voltage deviations
  - Transient voltage response
- PC considers voltage:
  - As it affects generator tripping
  - As it affects instability, uncontrolled separation, and Cascading
- Consideration of dynamic load modeling, induction motor load behavior

FERC Order 827

- Order 827 eliminated exemptions for wind generators from the requirement to provide reactive power
- All newly interconnecting non-synchronous resources will be required to provide reactive power as a condition of interconnection
- Key distinctions:
  - Power factor range
  - Point of measurement
  - Dynamic reactive capability
  - Active power threshold

Reactive Power Fundamentals

What is reactive power?
Why is reactive power important?

Dynamic vs. Static Resources

- **Dynamic reactive resources**
  - Adjust reactive power output automatically in real-time over a continuous range within a specified voltage bandwidth in response to grid voltage changes
  - Maintain set point voltage or operate in voltage droop mode
  - Many are power electronics based
  - Can respond within electrical cycles using fast-acting controls
- **Static reactive resources**
  - Fixed reactive power output at nominal voltage
  - Output varies according to voltage squared
  - Generally switched in and out of service based on system conditions
  - Switching action can be manual or automatic

Reactive Power Resources: Fixed and Switched Shunts

Reactive Power Resources: Transmission Circuits

$$VAR_{produced} = \frac{V^2}{X_C}$$

$$VAR_{consumed} = I^2 X_L$$

Reactive Power Resources: Synchronous Generators

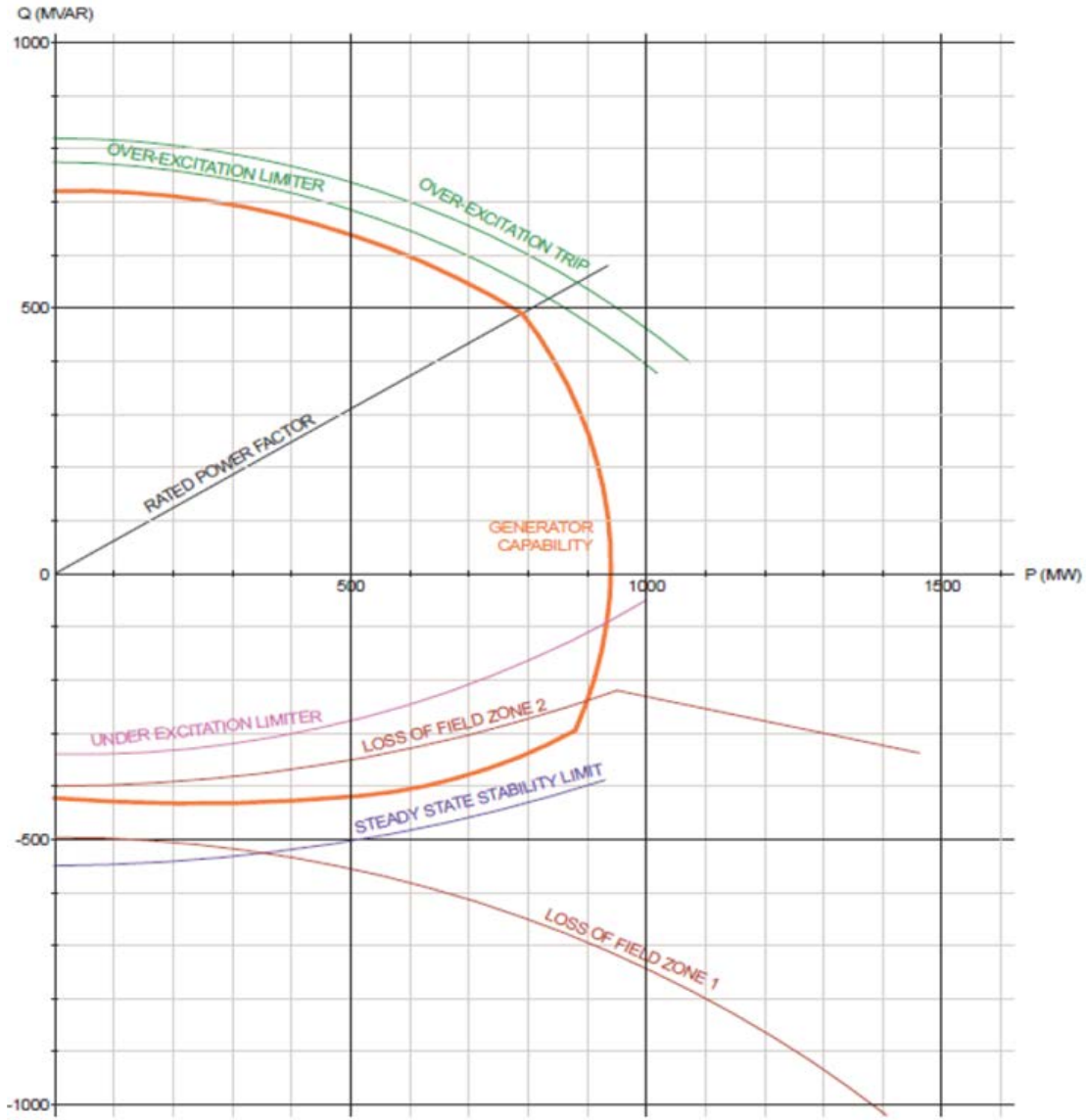

Reactive Power Resources: Synchronous Condensers

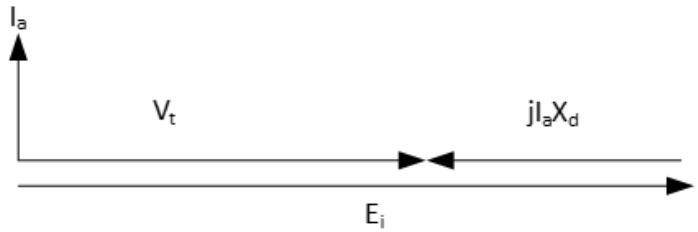

$V_t < E_i$
Overexcited Synchronous Condenser
(a)

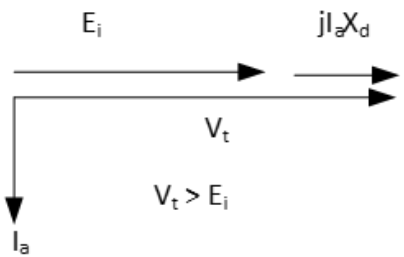

Underexcited Synchronous Condenser
(b)

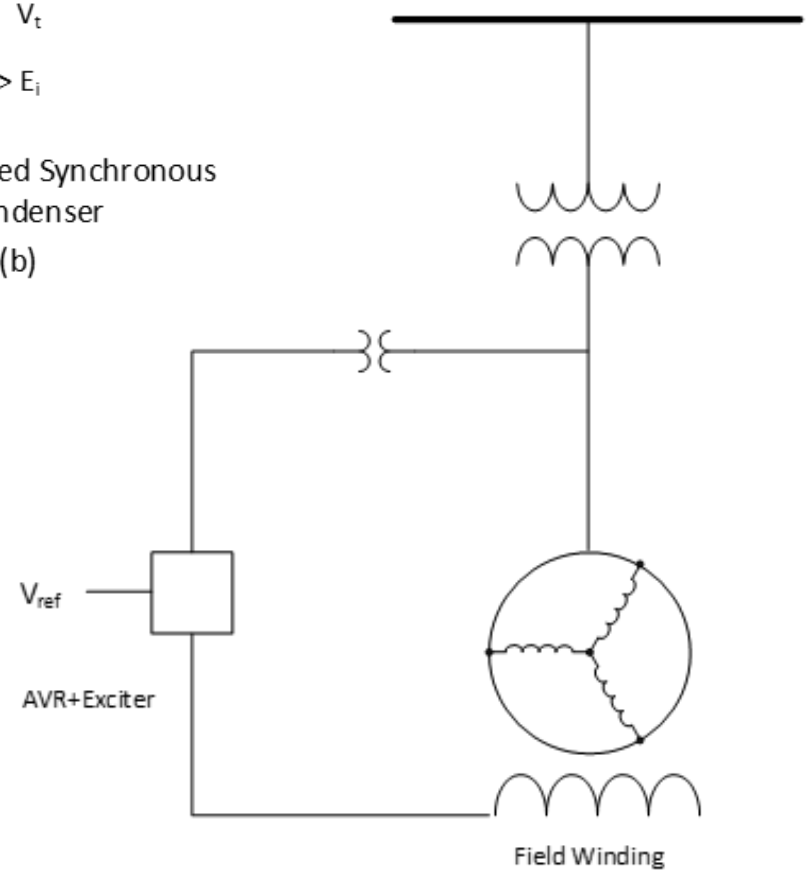

Reactive Power Resources: FACTS Devices

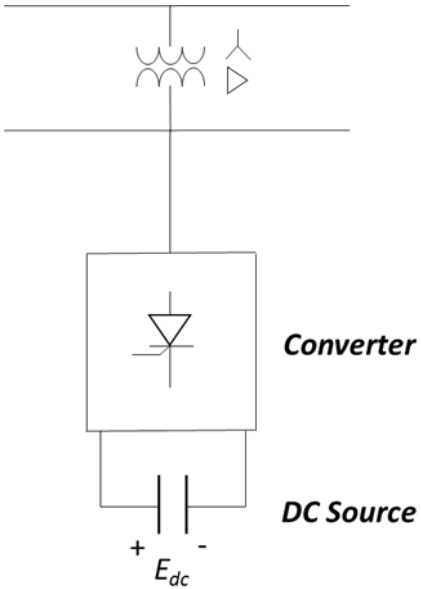

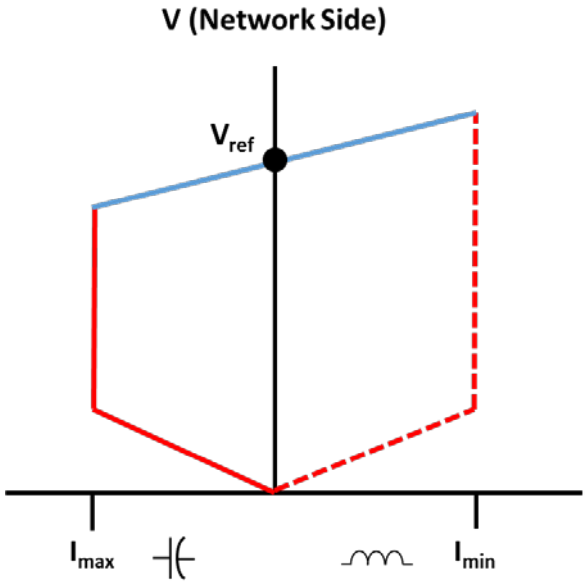

STATCOM

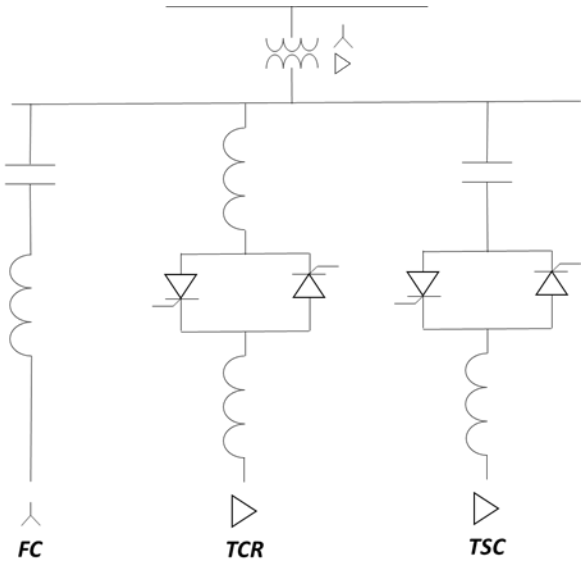

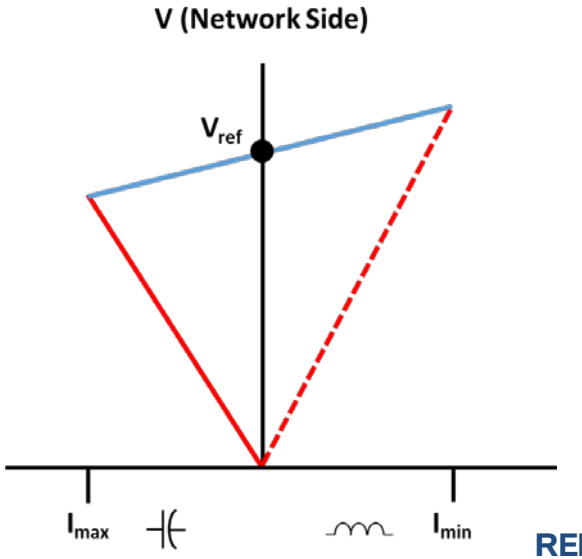

SVC

Reactive Power Resources: VSC HVDC

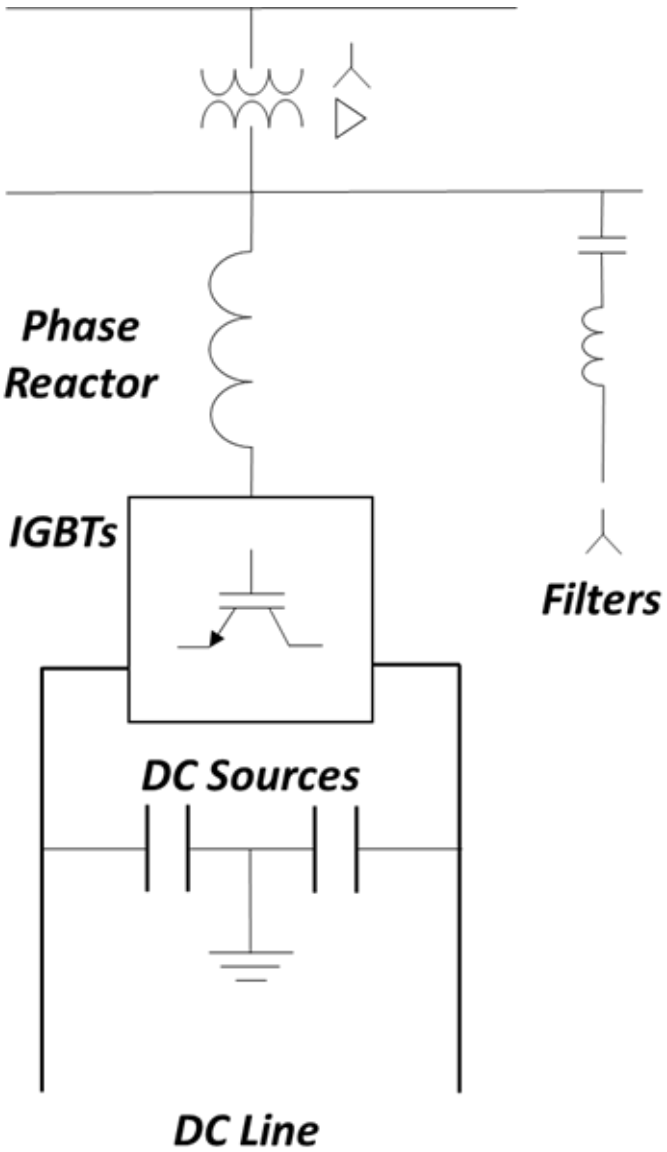

Reactive Power Analysis Timeframes

Steady-State Pre-Contingency

- Voltages maintained within ranges on BPS
- Elements maintaining terminal voltage set point value
- Manual readjustment of elements throughout day
  - Shunt capacitor switching, load tap changing, etc.
- Automatic devices continuously operating to maintain steady voltage profile
- Voltage should remain within limits for credible contingencies

Transient

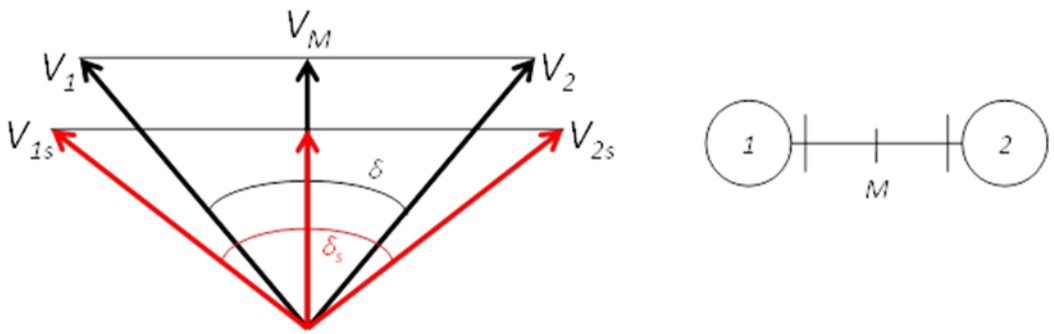
V_M
V_1
V_2
V_{1s}
V_{2s}
δ
δ_s
1
2
M

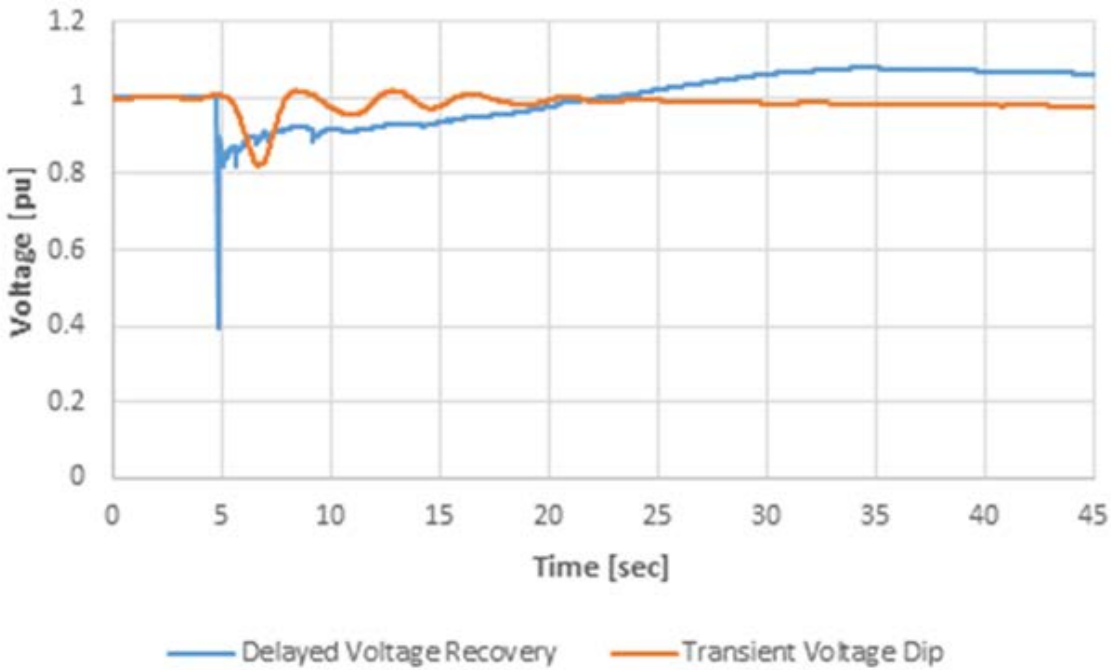
1.2
1
0.8
0.6
0.4
0.2
0
Voltage [pu]
0
5
10
15
20
25
30
35
40
45
Time [sec]
Delayed Voltage Recovery
Transient Voltage Dip

Mid-Term Dynamics

- Dampening oscillations, transitory state
- Returning to a new steady-state condition
- Dynamic resources adjusting
- Generator controls responding
- May consider load tap changing based on control delays
- Excitation limiters considered
- Slower manual controls not considered

Long-Term Dynamics: Post-Contingency

- New equilibrium following contingency
- Assess voltage stability and security at this new point
- All automatic controls responded
  - Voltage controls, power factor, governor response, FACTS, AGC, etc.
- Automatic tap changes and switched shunts acting
- Manual controls not considered in this timeframe
  - Manual load tap changing, manual capacitor switching, load shedding
- Assumes operators not acting this quickly

Steady-State: Post-Contingency

- All controls considered
- Applicable for associated emergency ratings
- Return to within acceptable operating limits
- All manual readjustments and automatic controls considered
  - Generation re-dispatch
  - Transformer tap changing
  - Manual and automatic capacitor switching
  - Fast- or slow-acting RAS
  - Other system readjustments
  - Transmission element switching (e.g., cables)

Reactive Power Assessment Techniques

Contingency Analysis

- Voltage criteria testing
  - Voltage/reactive contingencies could be different than typical thermal analysis contingencies
  - Voltage drop criteria: difference between pre- and post- contingency steady-state voltages (e.g., 2-6% threshold)
  - Absolute voltage criteria: acceptable lower and upper bus voltage magnitude limits (e.g., 0.95 pu and 1.05 pu)
- Voltage instability will not have converged power flow solution in post-contingency state
  - Tool will generate erroneous conditions (flows, voltages, etc.)
  - Post-contingency case should not be used to assess these conditions
  - Use engineering judgment to study conditions leading up to collapse

QV Analysis

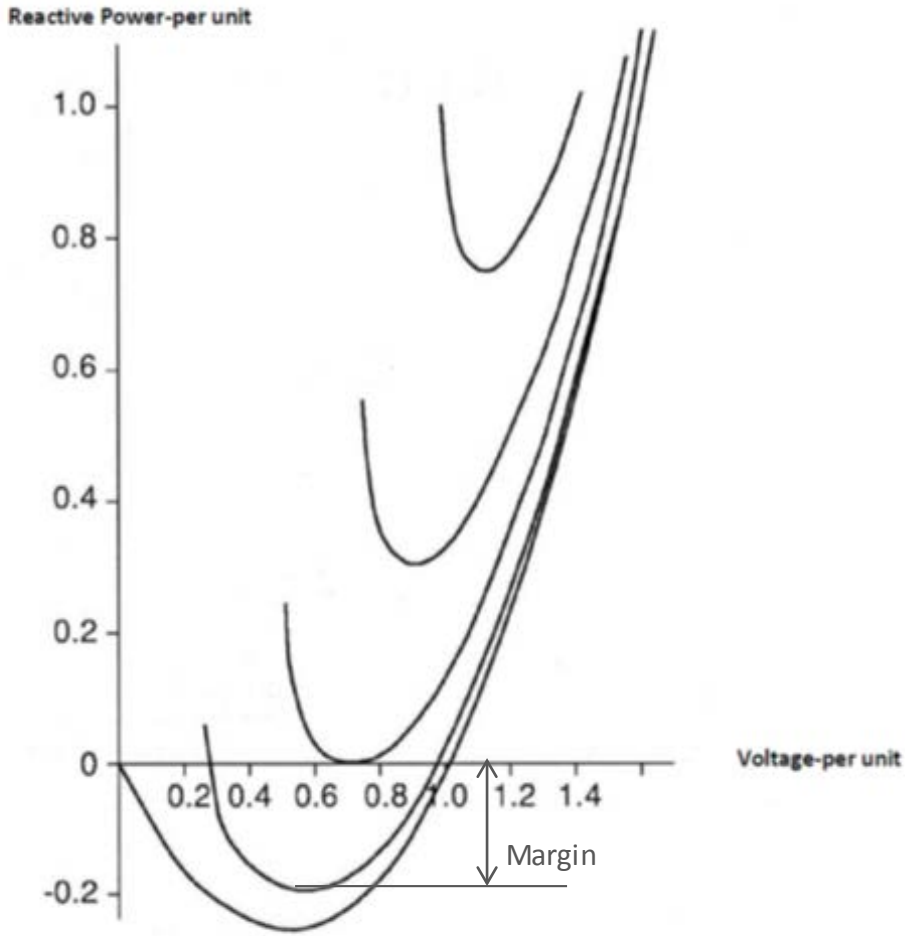

Source: ©CIGRE, 1986

PV Analysis

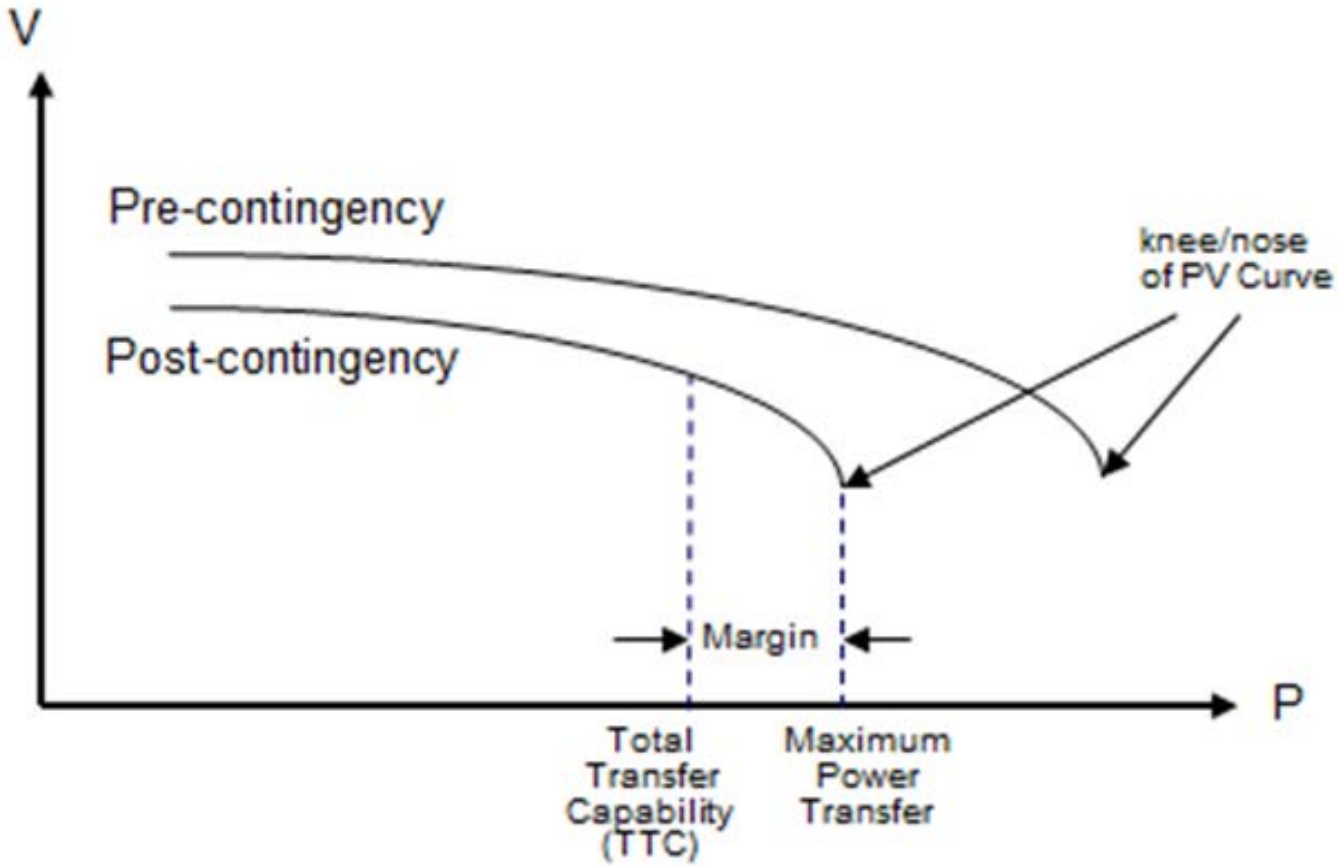
V
Pre-contingency
Post-contingency
knee/nose
of PV Curve
Margin
P
Total
Transfer
Capability
(TTC)
Maximum
Power
Transfer

Transient Stability Analysis

- Transient voltage swings
- Severe low voltages during swings can lead to instability and other uncontrolled actions
- Avoidance of excessively large transient swings or poorly damped (or undamped) voltage oscillations
- Factors affecting voltage swings
  - Pre-contingency transfer levels, voltage, and load levels
  - Pre-contingency dynamic reactive reserves
  - Pre-contingency loading on dynamic devices (e.g., machine reactive loading)

Reactive Power Sufficiency

Reactive Reserve

- Reserve of resource measured as difference between maximum Q for that operating point vs. actual Q output
  - Changes based on loading for synch generator ("D curve")
- Necessary to ensure transient and post-transient voltage collapse does not occur
- Typically only dynamic reactive reserve counted since voltage collapse may be fast
- TOP/RC pre-contingency adjustments to maintain post-contingency reliability
  - Maintain dynamic reactive reserves
  - Ensure sufficient speed of response to meet system needs
- Operators often maintain reserve margin

Voltage Response

- Starting voltage, transient voltage response, duration of response are measure of system strength
- Range of voltages seen across system
- Duration determined by fault clearing and re-acceleration of motor loads
- Oscillations and voltage swings
- Transient voltage dip vs. transient voltage recovery
- Relevant IEEE standards for voltage sags
- Sensitivity of load to voltage excursions
- Transient voltage dip criteria
- Voltage sags inevitable – design to minimize impact

Dynamic and Static Reactive Resources

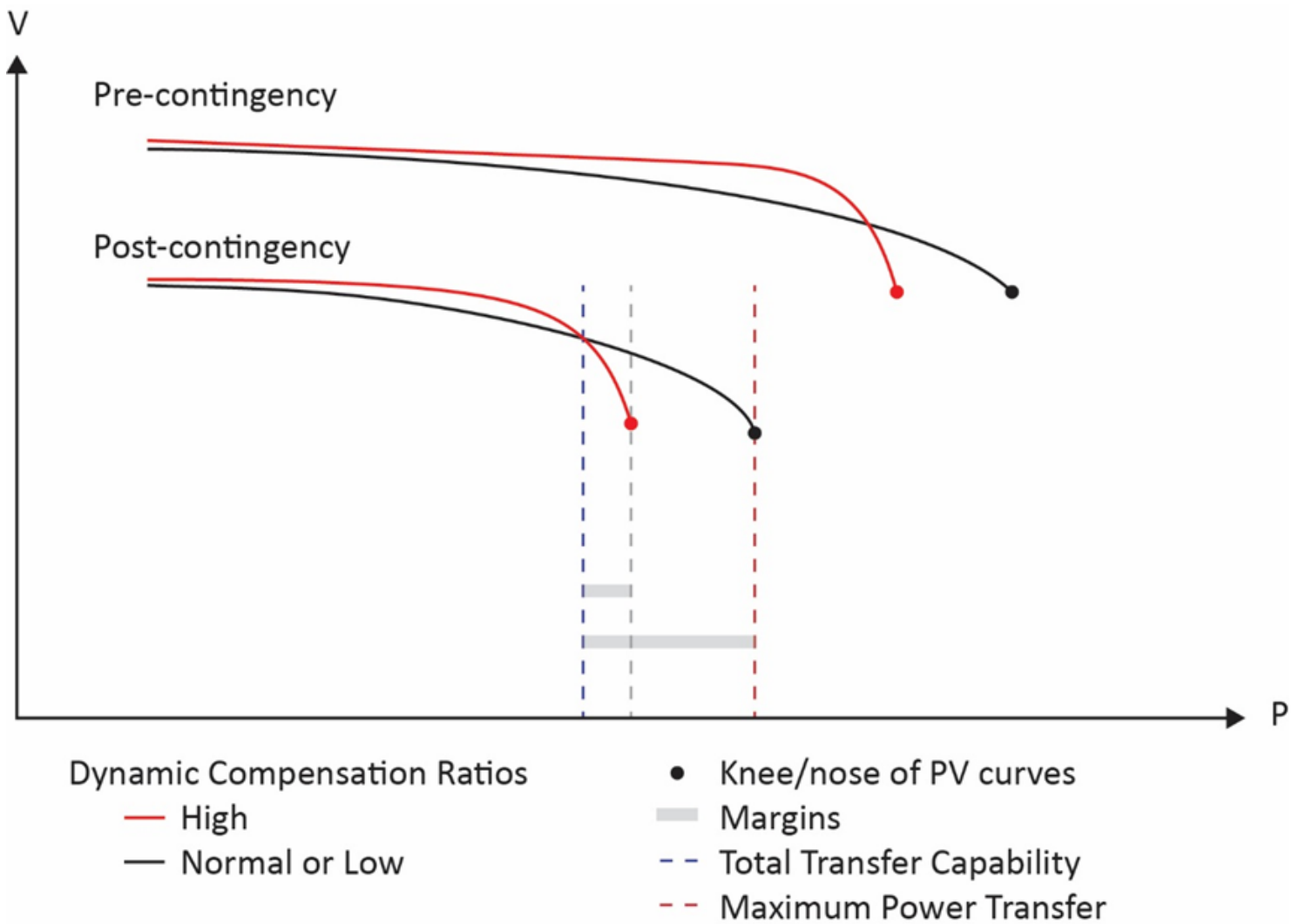

Operating Voltages and Voltage Schedules

- TOP Operating Plan – safe and reliable voltage levels
  - Local needs and wide-area considerations
  - Adjacent TOP scheduling practices, minimizing reactive losses, maximizing transfer capability, etc.
- Good utility practice to stay "ahead of the curve" regarding voltage – not desirable to "chase" voltage in real-time
- System voltage schedule vs. generator voltage schedule

Deriving Generator Voltage Schedules

- Typical generator modes of operation: Voltage Regulation, Constant Machine Power Factor, and Fixed Reactive output
- TOP develops voltage schedules and GOP required to operate to the schedule with AVR in V_{reg} mode
- **Range:** range of acceptable operating voltages for n-0 and n-1 conditions.
- **Under Normal Operating Conditions n-0**
  - **Target Set Point:** preferred voltage or power factor
    - **Target Voltage:** slightly above nominal voltage level (e.g., 1.02-1.05 pu)
  - **Tolerance Band:** minimum and maximum voltage or power factor
    - **Voltage Tolerance:** small bandwidth around target set point (e.g., 1-2%)
- **Under Contingency Operating Conditions n-1**
  - Post-contingency Voltage within tolerable range (e.g., 0.9 to 1.1 pu)

Example Operating Voltage Schedule Table

Table 1: Typical Operating Voltage Schedule Tables									
Bus #	Nominal Voltage [kV]	Typical Operational Voltage Schedules - On-Peak Period			Typical Operational Voltage Schedules - Off-Peak Period			Typical Acceptable Max/Min Voltage Schedule Range	
		kV Sched	Tolerance Band		kV Sched	Tolerance Band		Max kV	Min kV
			kV High	kV Low		kV High	kV Low		
1	345	356	359	353	356	359	353	362	327
2	115	116	118	114	116	118	114	121	109
3	115	118	120	116	117	119	115	121	110
4	115	119	121	117	117	119	115	121	110
5	345	358	361	355	356	359	353	362	335
6	115	118	120	116	118	120	116	121	109

Operational Time-Dependent Voltage Limits

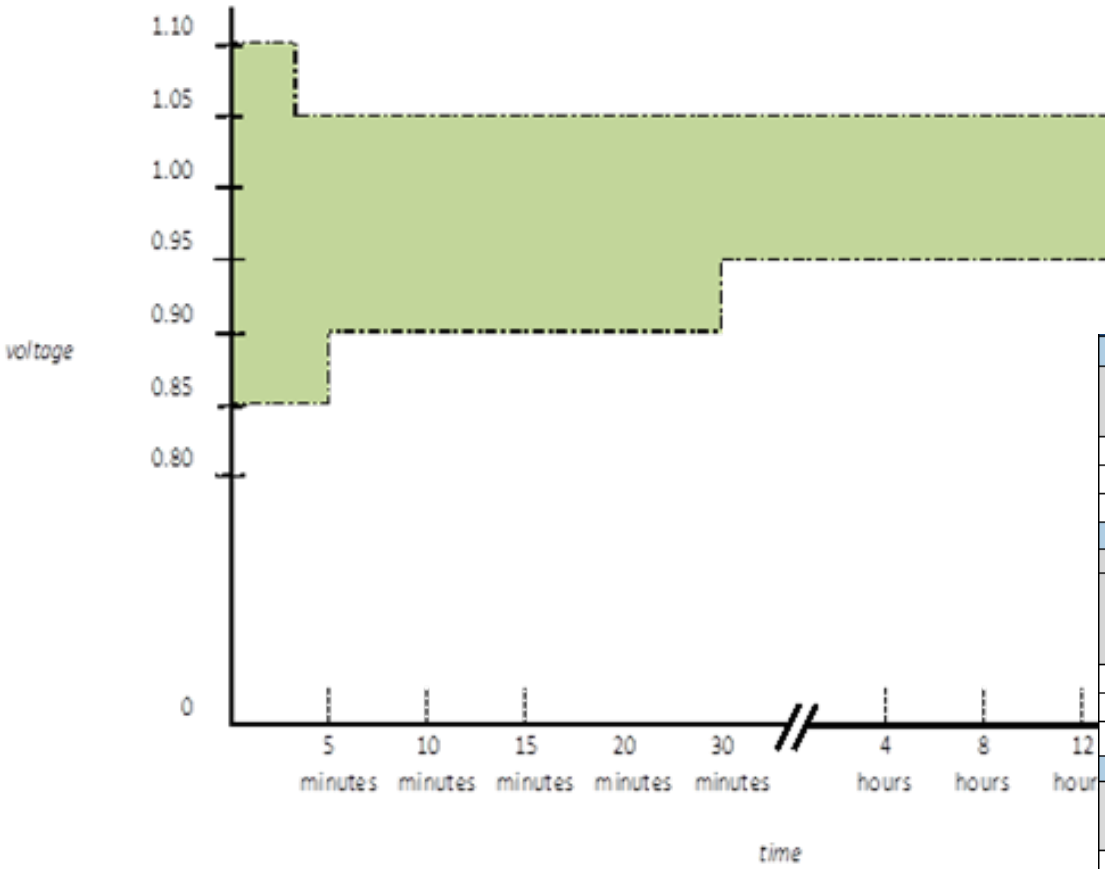

Normal Voltage Limits (NORMVL)				
TO	115 kV		345 kV	
	Low Voltage Limits (kV)	High Voltage Limits (kV)	Low Voltage Limits (kV)	High Voltage Limits (kV)
TO 1	109.0	121.0	328.0	362.0
TO 2	109.3	122.0	327.8	362.0
TO 3	109.3	121.0	327.8	362.0

Long Time Emergency Voltage Limits (LTEVL)						
	115 kV			345 kV		
TO	Time Applicable	Low Voltage Limits (kV)	High Voltage Limits (kV)	Time Applicable	Low Voltage Limits (kV)	High Voltage Limits (kV)
TO 1	Infinite	105.0	121.0	N.A.	N.A.	N.A.
TO 2	30 minutes	105.8	124.0	N.A.	N.A.	N.A.
TO 3	Load cycle	103.5	121.0	Load cycle	310.5	362.0

Short Time Emergency Voltage Limits (STEVL 15 Minutes only)				
TO	115 kV		345 kV	
	Low Voltage Limits (kV)	High Voltage Limits (kV)	Low Voltage Limits (kV)	High voltage limits (kV)
TO 1	102.0	121.0	N.A.	N.A.
TO 2	N.A.	N.A.	327.8	369.0
TO 3	100.0	121.0	N.A.	N.A.

Drastic Action Voltage Limits (DAVL 5 Minutes only)				
TO	115 kV		345 kV	
	Low Voltage Limits (kV)	High Voltage Limits (kV)	Low Voltage Limits (kV)	High Voltage Limits (kV)
TO 1	100.0	121.0	N.A.	N.A.
TO 2	N.A.	N.A.	N.A.	N.A.
TO 3	98.0	121.0	N.A.	N.A.

Generator Voltage Control

- Largest and most prevalent reactive power resource of BPS
- Large dynamic reactive capability – robust reactive resource
- TOPs provide voltage schedule
  - Range or target with tolerance
  - At high or low side of GSU, or at POI
  - Bandwidth reflective of expected system conditions
- GOP ensure automatic voltage control mode, AVR in service
- GOP notifies TOP if AVR removed from service
- GOP may employ different control strategies to ensure voltage at location deemed by TOP
- Under special circumstances, TOP can specify alternative method of control such as Q schedule

Generator Automatic Voltage Control Techniques

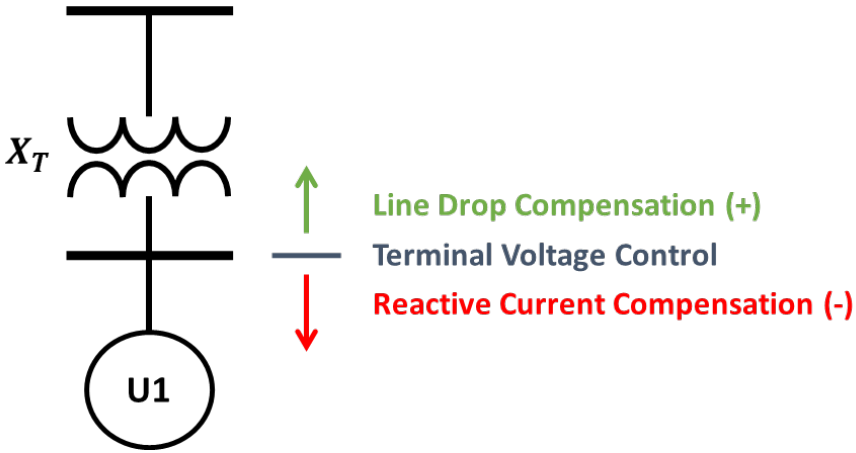

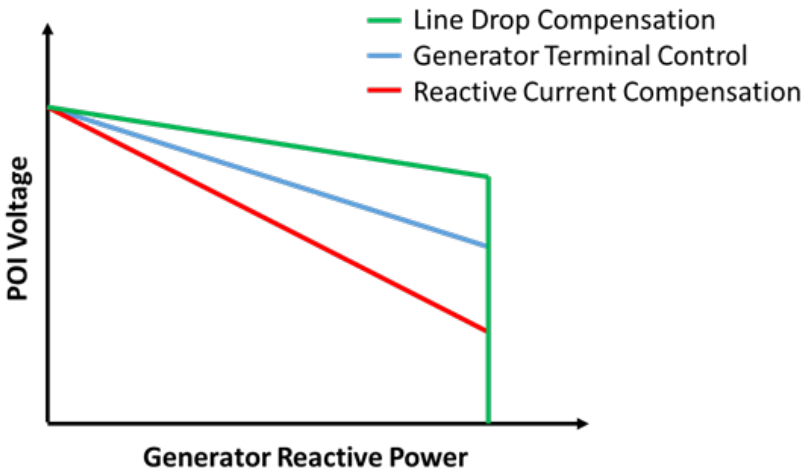

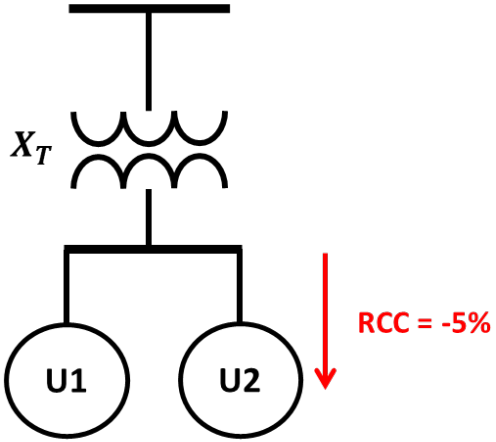

Reactive Current Compensation

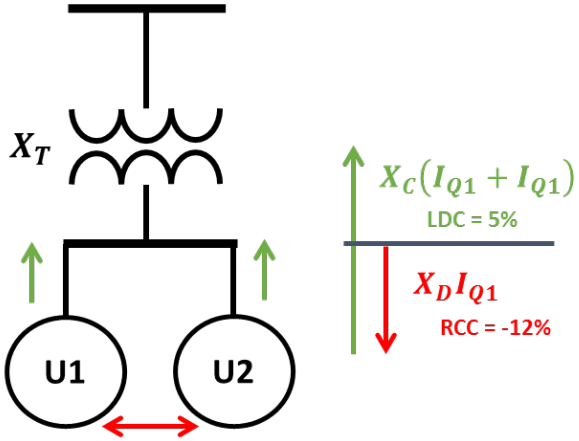

Cross Current Compensation

Light Load Operating Conditions

- Operational flexibility
  - e.g., morning hours, spring or fall, holiday weekend, etc.
- Planning assessments of representative light load conditions
  - Ensure reflective load levels in light load planning case
- Need for mix of leading and lagging resources
- Must ensure reliability under full range of possible load levels
- High voltage issues
  - Equipment damage
  - Generation tripping

Reactive Power Coordination

Transmission-Distribution Coordination

- Modeling of end-use loads
- Voltage and reactive power performance
- Load power factor
  - Forecasting
  - Requirements
  - Monitoring
  - Review
  - Correction

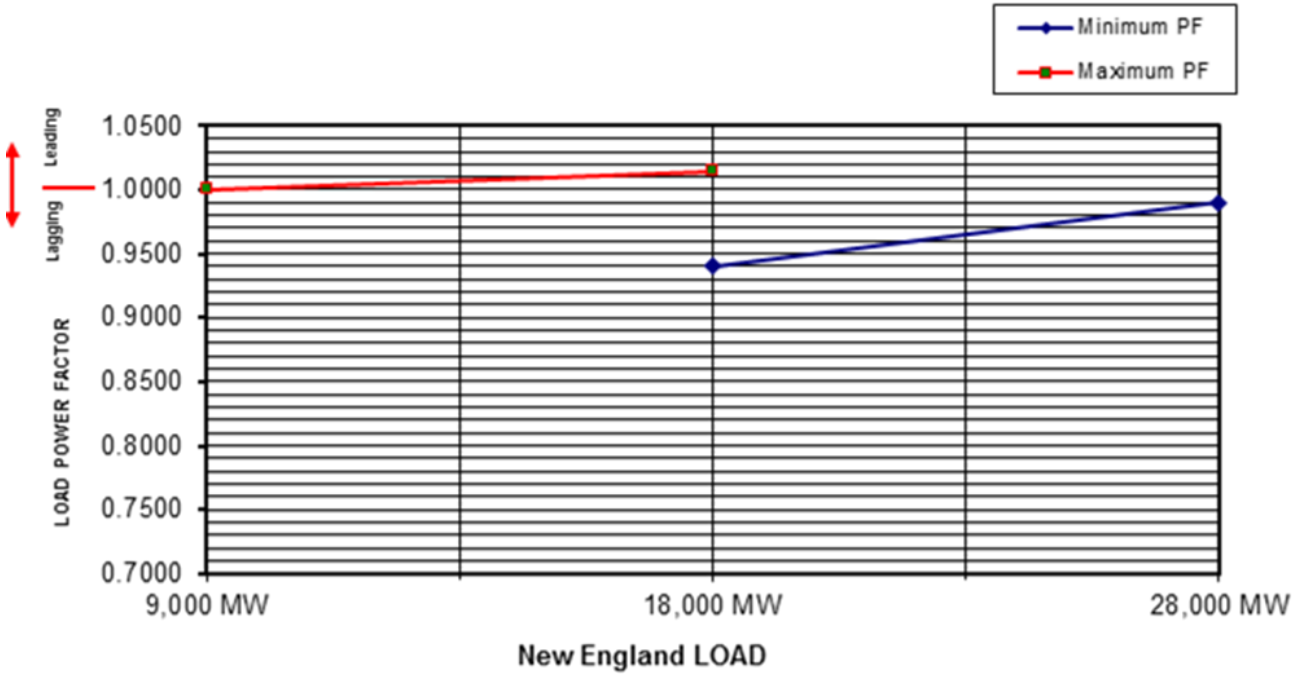

Transmission-Generation Coordination

- Capabilities in accordance with most recently signed interconnection service agreement
- TO periodically review with GO expected reactive power performance for each unit
- MOD-025 capability verification
- Planned changes/updates to gen capability
- Ensure realistic performance capability from units
  - "Inside the fence" plant voltage constraints (e.g., auxiliary bus voltage)
- TO/TP review of (real-time and planning) data to confirm simulated vs. actual

Planning Coordinator to Transmission Planner Coordination

- PCs should coordinate with their TPs to develop processes to assure adequate reactive resource capabilities within footprint
  - Reactive power assessment techniques
  - Reasonable projections of reactive power requirements
  - Reflective projections of reactive power resources
- TPs should plan Q resources to match their Q requirements for normal and contingency conditions
- PCs should coordinate among TPs to ensure sufficient Q available to address localized issues

Planning Coordinator to Planning Coordinator Coordination

- Coordinate with adjacent PCs
- Specific attention to seams between PCs
- Unified coordination with the RC for operational issues

Industry Practices:
Customized Reactive Power Planning

ERCOT Practices

- Voltage profile WG sets coordinated system voltage profile for N-0 and N-1 network conditions.
- Online Voltage Stability Limits using VSAT
- HVRT requirement
  - Intermittent Renewable Resources tested at 50% or 100% output and at 0.95 p.f. lagging or leading.

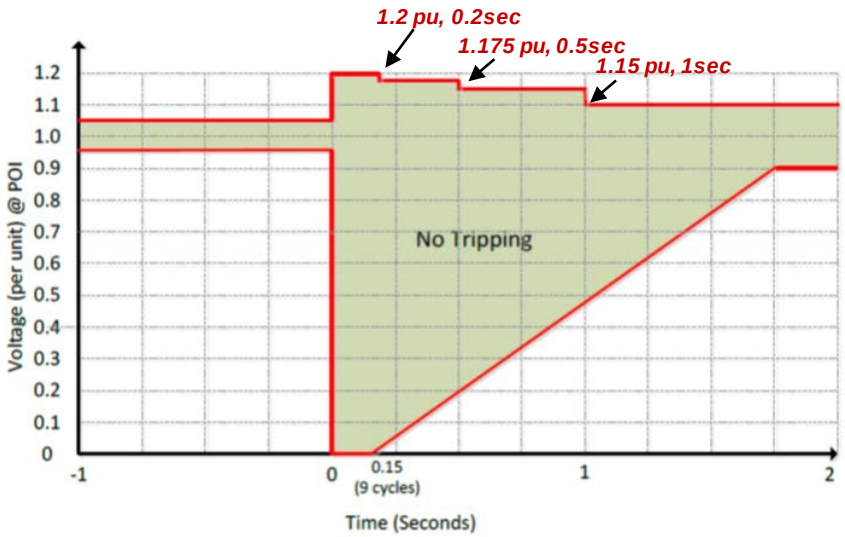

- Studies of low SCR networks had recommended synchronous condenser to satisfy reactive power requirements.

ISO-NE Practices

- Steady-state voltage limits established planning and ops
  - Coordination of TOs, TOPs, and GOs
  - Recognize the practical limitations of reactive device switching
- Utilize time-dependent emergency transmission voltage limits
  - Coordinated with equipment owners, deployed in ISO-NE control room.
- Annually determine acceptable load power factor (LPF) min/max required for system sub-areas
  - “After the fact” audits to determine compliance with the requirements
- Reactive market pays resources for lead/lag reactive capability.
  - Resource reactive capability audited ever 5 years as part of the market

MISO Practices

- Assessments performed during real-time operations:
  - Steady-state voltage assessment (pre- & post-contingent, RTCA)
  - P-V Analysis (online VSAT)
  - Dynamics analysis (transient voltage violations, online TSAT)
  - Static & Dynamic reactive reserve calculations
- Mitigation plans for potential violations closely coordinated with member TOPs
- Real-time operations are supported by day-ahead, operational-planning and long-term planning studies
- Reactive power and voltage control service settled under Schedule 2 of MISO's tariff

PJM Practices

- EMS real-time contingency analysis (Static and Dynamic) is primary tool to assess the PJM system
- PJM models reactive interfaces to address potential system-wide voltage problems due to power transfers
  - Reactive Interfaces ensure sufficient wide-area reactive reserves to permit transfers
- Transfer Limit Calculation (TLC) is used to project limitations of increased transfers
  - Determines the maximum pre- and post-contingency MW transfer interface flow for
    - Voltage low limits
    - Voltage drop limits
    - Voltage stability limits

PJM Practices

- Each limit calculated for each of the reactive interface lines
- Each limit may be driven by different contingencies with different violated buses to a particular transfer
  - "Recommended Limit" is the lower of the "Voltage Drop Violation Point/Post-Contingency Low Voltage Violation Point" or the "Voltage Stability Limit Point" minus the "Interface Margin".
- Voltage Stability Analysis (VSA) used to augment analysis of TLC
- VSA provides control recommendations
  - Non cost control
  - Off cost control (VSA does not consider cost)
  - Load shedding
  - Voltage sensitivities
- PJM On-line TSA for Transient Stability and Voltage Dip in the real time operations

Voltage as an Essential Reliability Service

- Reactive power is an Essential Reliability Service to the Bulk Power System
- Sufficient levels of reactive power to maintain acceptable voltage levels is critical to reliability
- Static and dynamic reactive power support necessary to transfer active power to serve load
- NERC ERSTF/ERSWG efforts
  - ERSTF Framework Report
  - ERS Measure 7 – Reactive Support
  - ERS Sufficiency Guidelines – Sub-Area Concept
  - 2017: How best to track and trend localized voltage/reactive issues?

Questions?