NERC
NORTH AMERICAN ELECTRIC
RELIABILITY CORPORATION

NERC Compliance Process Directive #2011-CAG-001

Directive Regarding Generator Transmission Leads

Attachment 1

Typical Generator Transmission Leads One-Line Diagrams

RELIABILITY | ACCOUNTABILITY

Glossary of Icons

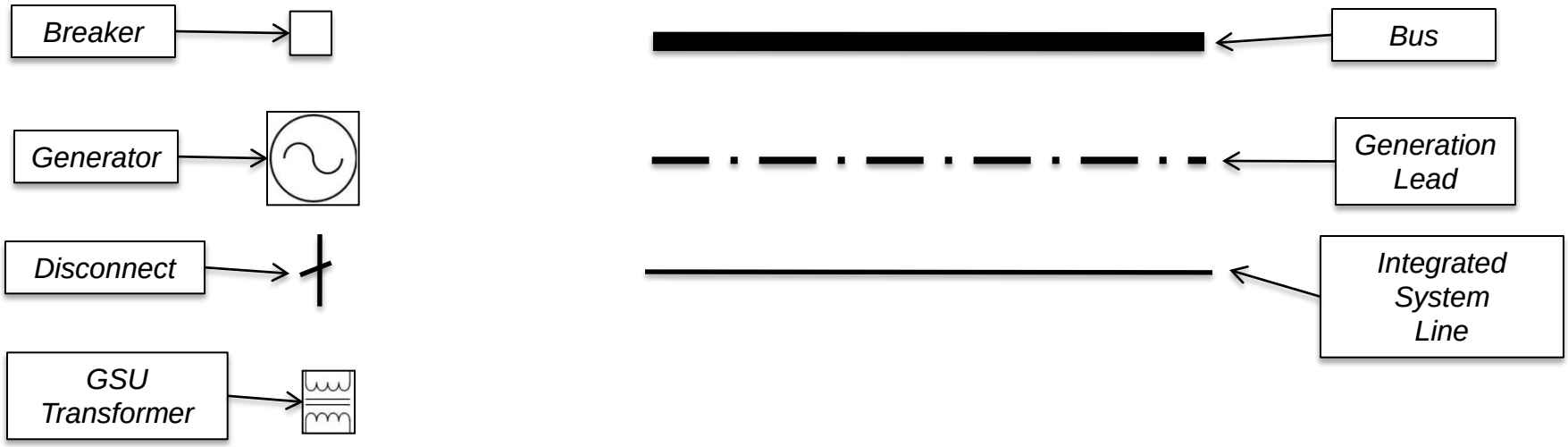

Single Generator Transmission Lead

1a

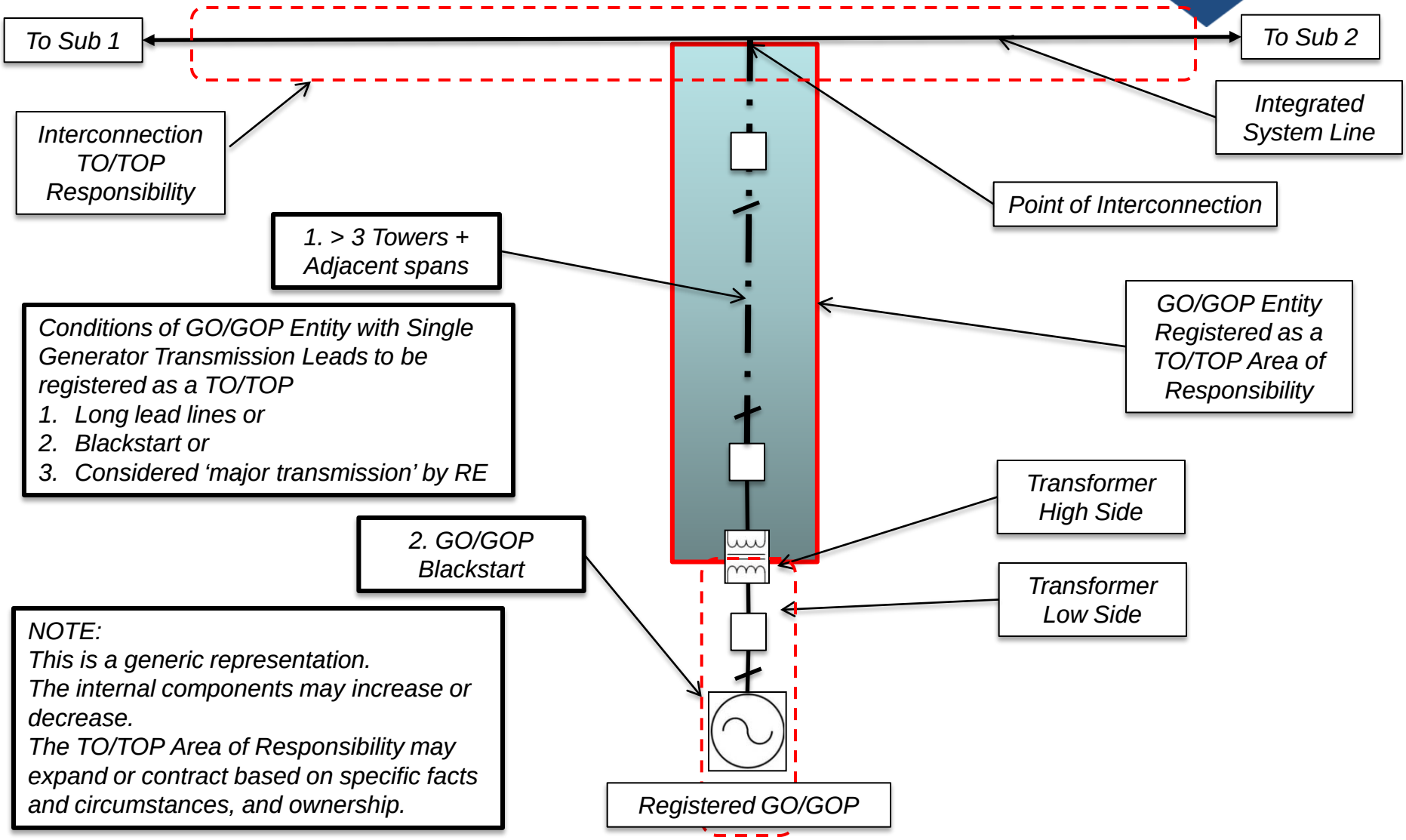

Multiple Generator Transmission Leads

2a

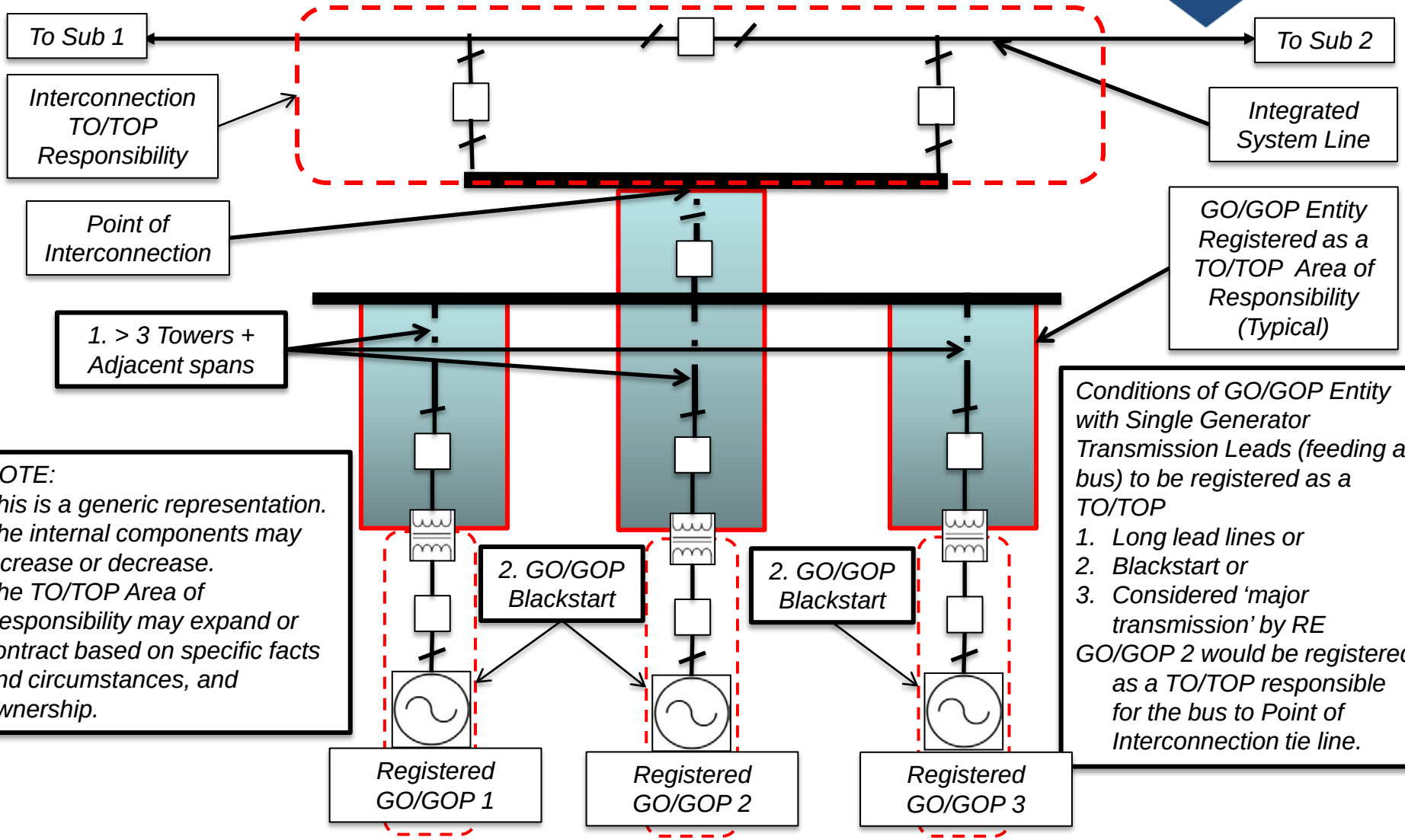

NOTE:
This is a generic representation. The internal components may increase or decrease.
The TO/TOP Area of Responsibility may expand or contract based on specific facts and circumstances, and ownership.

Conditions of GO/GOP Entity with Single Generator Transmission Leads (feeding a bus) to be registered as a TO/TOP

1. *Long lead lines or*
2. *Blackstart or*
3. *Considered 'major transmission' by RE*

GO/GOP 2 would be registered as a TO/TOP responsible for the bus to Point of Interconnection tie line.