NERC
NORTH AMERICAN ELECTRIC RELIABILITY CORPORATION

Reliability Guideline

Performance, Modeling, and Simulations of BPS-Connected Battery Energy Storage Systems and Hybrid Power Plants

March 2021

RELIABILITY | RESILIENCE | SECURITY




3353 Peachtree Road NE
Suite 600, North Tower
Atlanta, GA 30326
404-446-2560 | www.nerc.com

Table of Contents

Preface

Electricity is a key component of the fabric of modern society and the Electric Reliability Organization (ERO) Enterprise serves to strengthen that fabric. The vision for the ERO Enterprise, which is comprised of the North American Electric Reliability Corporation (NERC) and the six Regional Entities (REs), is a highly reliable and secure North American bulk power system (BPS). Our mission is to assure the effective and efficient reduction of risks to the reliability and security of the grid.

Reliability | Resilience | Security

Because nearly 400 million citizens in North America are counting on us

The North American BPS is made up of six RE boundaries as shown in the map and corresponding table below. The multicolored area denotes overlap as some load-serving entities participate in one RE while associated Transmission Owners (TOs)/Operators (TOPs) participate in another.

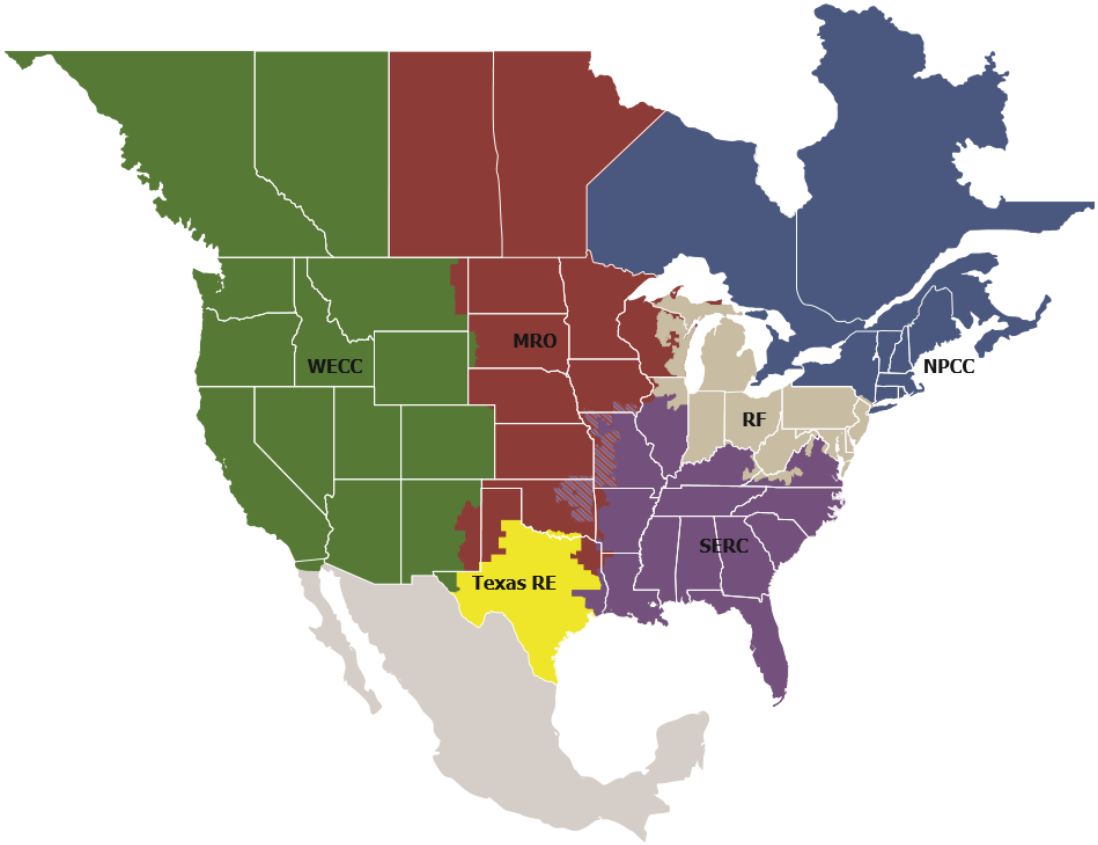

MRO	Midwest Reliability Organization
NPCC	Northeast Power Coordinating Council
RF	ReliabilityFirst
SERC	SERC Reliability Corporation
Texas RE	Texas Reliability Entity
WECC	WECC

Preamble

The NERC Reliability and Security Technical Committee (RSTC), through its subcommittees and working groups, develops and triennially reviews reliability guidelines in accordance with the procedures set forth in the RSTC Charter. Reliability guidelines include the collective experience, expertise, and judgment of the industry on matters that impact BPS operations, planning, and security. Reliability guidelines provide key practices, guidance, and information on specific issues critical to promote and maintain a highly reliable and secure BPS.

Each entity registered in the NERC compliance registry is responsible and accountable for maintaining reliability and compliance with applicable mandatory Reliability Standards. Reliability guidelines are not binding norms or parameters; however, NERC encourages entities to review, validate, adjust, and/or develop a program with the practices set forth in this guideline. Entities should review this guideline in detail and in conjunction with evaluations of their internal processes and procedures; these reviews could highlight that appropriate changes are needed, and these changes should be done with consideration of system design, configuration, and business practices.

Metrics

Pursuant to the Commission's Order on January 19, 2021, *North American Electric Reliability Corporation*, 174 FERC ¶ 61,030 (2021), reliability guidelines shall now include metrics to support evaluation during triennial review, consistent with the RSTC Charter.

Baseline Metrics

- Performance of the BPS prior to and after a reliability guideline, as reflected in NERC's State of Reliability Report and Long Term Reliability Assessments (e.g., Long Term Reliability Assessment and seasonal assessments);
- Use and effectiveness of a reliability guideline as reported by industry via survey; and
- Industry assessment of the extent to which a reliability guideline is addressing risk as reported via survey.

Specific Metrics

The RSTC or any of its subcommittees can modify and propose metrics specific to the guideline in order to measure and evaluate its effectiveness.

- [Reserved]

Executive Summary

Interconnection queues across North America are seeing a rapid influx of requests for battery energy storage systems (BESS) and hybrid power plants.[1] While there are different types of energy storage technologies, BESS are experiencing a rapid increase in penetration levels due to favorable economics, policies, and technology advancements.[2] Similarly, BESS are most commonly being coupled with inverter-based generating resources, such as wind and solar photovoltaic (PV). Therefore, BESS and inverter-based hybrid power plants are the primary focus of this reliability guideline.

NERC previously published a reliability guideline in 2018 that outlined the recommended performance for BPS-connected inverter-based resources.[3] The guidance provided in that document included BESS as an inverter-based technology; however, there are certain considerations and nuances to the operation of this technology that warrant additional guidance. Hybrid plants also pose new benefits to the BPS by combining operational capabilities across different technologies; however, there are different types of hybrid configurations (ac-coupled versus dc-coupled) and complexities and unique operational considerations of hybrid plants that need additional guidance as well. The reliability guideline presented here provides guidance, clarifications, and considerations not previously covered in the initial reliability guideline, focusing specifically on BESS and hybrid power plants. NERC also published a reliability guideline in 2019 that recommended all Transmission Owners (TOs), Transmission Planners (TPs), and Planning Coordinators (PCs) improve their interconnection requirements and planning processes for newly interconnecting inverter-based resources.[4] That guidance also pertained to BESS and hybrid power plants but was not specifically addressed in detail in the previous reliability guideline. Therefore, the guidance contained in the materials presented in this document should also be used by TOs, TPs, and PCs to further enhance their interconnection requirements and study processes for BESS and hybrid power plants.

The recommendations in this guideline should apply to all BPS-connected BESS and hybrid plants and should not be limited only to Bulk Electric System (BES) facilities. Many newly interconnecting BESS projects and hybrid plants may not meet the BES definition; however, having unified performance and behavior from all BPS-connected inverter-based resources (including BESS and hybrid plants) is important for reliable operation of the North American BPS. Building off the NERC *Reliability Guideline: Improvements to Interconnection Requirements for BPS-Connected Inverter-Based Resources*,[4] TOs are encouraged to incorporate the recommended performance characteristics into their interconnection requirements per NERC FAC-001, and TPs and PCs are encouraged to incorporate the recommended modeling and studies approaches into their interconnection processes per NERC FAC-002. The IEEE P2800 project is currently developing "interconnection capability and performance criteria for inverter-based resources interconnected with transmission and networked sub-transmission systems" that will also apply to BESS and hybrid power plants.[5] Where any potential overlap exists, the guidance in this reliability guideline should be considered by applicable entities until IEEE P2800 is approved and fully implemented by industry.

This reliability guideline includes the recommended performance of BPS-connected BESS and hybrid power plants that all Generator Owners (GOs) and developers seeking interconnection to the BPS should consider. These performance recommendations can also be used by TOs, TPs, and PCs to improve their interconnection requirements and study processes for these facilities. This reliability guideline also covers recommended modeling and study practices that should be considered by TPs and PCs as they perform planning assessments with increasing numbers of BESS and hybrid power plants both in the interconnection study process, annual planning process, and for any specialized studies needed to ensure BPS reliability.

---

[1] A hybrid power plant is defined herein as "a generating resource that is comprised of multiple generation or energy storage technologies controlled as a single entity and operated as a single resource behind a single POI."
[2] https://www.eia.gov/analysis/studies/electricity/batterystorage/
[3] https://www.nerc.com/comm/PC_Reliability_Guidelines_DL/Inverter-Based_Resource_Performance_Guideline.pdf
[4] https://www.nerc.com/comm/PC_Reliability_Guidelines_DL/Reliability_Guideline_IBR_Interconnection_Requirements_Improvements.pdf
[5] https://standards.ieee.org/project/2800.html

High-Level Recommendations

This reliability guideline contains detailed recommendations regarding BESS and hybrid power plant performance, modeling, and studies. Industry is strongly encouraged to review the guidance provided, use the technical details and reference materials provided, and adapt the recommendations provided for their specific processes and practices. **Table ES.1** provides a set of high-level recommendations (categorized by performance, modeling, and studies) and their applicability[6] that encompass all aspects of the guidance contained throughout this reliability guideline.

Table ES. 1: High-Level Recommendations for BESS and Hybrid Plant Performance, Modeling, and Studies

#	Recommendation	Applicable Entities
A1	**Applicability:** The recommendations in this guideline should be applied to all BPS-connected BESS and hybrid plants and should not be limited to only BES facilities. Many newly interconnecting BESS and hybrid power plants may not meet the BES definition; however, having unified performance and behavior from all BPS-connected inverter-based resources is important for reliable operation of the North American BPS.	TOs, TPs, PCs, BAs, RCs, GOs, GOPs, developers, equipment manufacturers
P1	**BESS and Hybrid Plant Performance:** GOs of existing or newly interconnecting BESS and hybrid power plants should closely review the recommended performance characteristics outlined in this reliability guideline and adopt these recommendations into existing and new facilities to the extent possible. Newly interconnecting GOs of BESS and hybrid power plants should work closely with their respective TOs, Balancing Authorities, Reliability Coordinators (RCs), TPs, and PCs to ensure all entities have an understanding of the operational capabilities and limitations of the facilities being interconnected. BESS and hybrid plant developers, in coordination with equipment manufacturers, should also use the recommendation provided herein regarding BESS/hybrid plant performance when designing new facilities.	GOs, GOPs, developers, equipment manufacturers
P2	**Interconnection Requirements and Processes:** TOs should update or improve their interconnection requirements to ensure they are clear and consistent for BESS and hybrid power plants. TPs and PCs should ensure that their modeling requirements include clear specifications for BESS and hybrid power plants. TPs and PCs should also ensure that their study processes and practices are updated and improved to consider the unique operational capabilities of those facilities.	TOs, TPs, PCs
P3	**Unique Operational Capabilities of BESS and Hybrid Power Plants:** All applicable entities should consider the detailed guidance contained in this guideline and fully utilize the operational capabilities of these new technologies to support reliable operation of the BPS. Capabilities like grid forming technology, operation in low short-circuit networks, the ability to provide primary and fast frequency response (FFR), and other functions more readily available in these new technologies should be fully utilized (as needed) and are essential reliability services (ERSs) for the BPS.	TOs, TPs, PCs, BAs, RCs, GOs, GOPs, developers, equipment manufacturers

[6] The applicability column for each of the recommendations made is solely intended to provide guidance for which entities are referenced in the recommendation (and should consider the recommendation made in their business practices).

Table ES. 1: High-Level Recommendations for BESS and Hybrid Plant Performance, Modeling, and Studies		
#	**Recommendation**	**Applicable Entities**
M1	**Models Matching As-Built Controls, Settings, and Performance:** All BESS and hybrid plant GOs (in coordination with the developer and equipment manufacturers) should ensure that the models used to represent BESS and hybrid power plants accurately represent the controls, settings, and performance of the equipment installed in the field. This requires concerted focus by the GO, developer, and equipment manufacturer during the study and commissioning process as well as more rigorous verification and testing by the TP and PC throughout. GOs should also provide updated models to the TP and PC that reflect as-built settings and controls after plant commissioning. The TP and PC should study any modifications to equipment settings that have an impact on the electrical performance of the equipment prior to changes being made, per the latest effective version of NERC FAC-002. TPs and PCs should ensure their modeling requirements and processes clearly define the types of models that are acceptable, the level of detail expected for each model, and the benchmarking between models required during the planning study process. GOs, GOPs, and developers of each BESS and hybrid power plant should verify, in coordination with their TP, PC, and equipment manufacturer, that the dynamic models fully represent the expected behavior of the as-built facility.	TPs, PCs, GOs, GOPs, developers, equipment manufacturers
M2	**Software Enhancements:** The technological advancement of BESS and hybrid plant controls is outpacing the capabilities available in the standardized library models. Simulation software vendors should work with BESS and hybrid plant inverter and plant-level controller manufacturers to develop more flexible dynamic models to represent these facilities. Software developers should be proactive in addressing modeling challenges faced by TPs and PCs in this area, particularly as the number of these types of resources rapidly increases in interconnection-wide base cases. Software vendors should support the advancement of using "real-code"[7] models or other user-defined models in a manner that does not degrade or limit the quality and fidelity of the overall interconnection-wide base case. Software vendors should consider adding model validation, verification, quality review, and other screening tools to their programs to support TP and PC review of model quality. Software vendors should improve the steady-state model representation of hybrid plants such that engineers are not required to use workarounds, such as modeling two separate units to represent a single hybrid plant.	Simulation software vendors, equipment manufacturers
S1	**Study Process Enhancements:** TPs and PCs should improve their study processes for both interconnection studies and annual planning studies to ensure they are appropriate for a BPS with significantly more BESS and hybrid power plants. Determination of stressed operating conditions, selection of study assumptions, inclusion of various modeling practices, and determination of appropriate dispatch conditions are just a few areas where close attention will be needed by TPs and PCs to ensure their study approaches align with the new technologies.	TPs, PCs
S2	**Expansion of Study Conditions:** The variability and uncertainty of renewable energy resources has led TPs and PCs to study different expected operating conditions than were previously used for planning assessments. BESS and hybrid plants may help address some of the operational variability; however, developing suitable and reasonable study assumptions will become a significant challenge for future planning studies. TPs and PCs may need to expand the set of study conditions used for future planning assessments as the most severe operating conditions may change over time.	TPs, PCs

[7] "Real code" models are a type of black box model that implement the actual control code from the equipment. The real-code aspects of the model pertain mainly to the controller-related code in the turbine controls, inverter controls, protection and measurement algorithms, and plant-level controller.

Background

The North American generation mix, like many areas around the world, is trending towards increasing amounts of inverter-based resources, most predominantly wind and solar PV resources. According to the U.S. Energy Information Administration (EIA) *Annual Energy Outlook 2020*,[8] wind power capacity in the United States more than doubled in the past decade (39.6 GW in 2010 to 107.4 GW in 2019) and solar generation multiplied by 25x from 2.7 GW in 2010 to 67.7 GW in 2019. Wind and solar generation supplied nearly 7.2% and 2.7% of United States energy in 2019, respectively. The EIA and many other organizations have projected continued rapid growth of both technologies over the next several decades. This rapid evolution at both the BPS and distribution system challenges conventional planning and operating practices yet poses benefits to BPS planning, operations, and design. One of the primary challenges is the variability and uncertainty of renewable energy resources, which leads to additional variability and uncertainty in the planning and operations horizons. The need for flexibility coupled with favorable economics has therefore led to an influx of BPS-connected energy storage projects and hybrid power plants using energy storage.[9]

Areas across North America are also seeking low-carbon power systems. For example, California requires[10] that eligible renewable energy resources and zero-carbon resources supply 100% of retail sales of electric energy to California end-use customers and 100% of electric energy procured to serve all state agencies by the end of 2045. As such, the California Public Utilities Commission has seen a surge of new energy storage contracts, achieved its 2020 energy storage goal of 1,325 MW ahead of time[11] and is projected to have 55,000 MW of new storage by 2045.[12] At the same time, the risk and impact of wildfires in the area is leading California utilities, policymakers, and end-use customers toward more close consideration for grid resilience and flexibility. Energy storage systems, particularly BESS, and BESS coupled with inverter-based resources to create hybrid power plants are providing short-term energy and reliability services, including ramping and variability control, voltage and frequency regulation, operation in low short-circuit strength conditions, and other features.

Historically, BESS have not been a significant factor in planning and operating the BPS; however, interconnection requests and projects being constructed today have scaled up to match the size of solar PV and wind plants. For example, the Gateway Project in the San Diego Gas and Electric area consists of a 250 MW BESS providing energy and ancillary services in the California Independent System Operator (CAISO) market.[13] California recently approved a proposed 1,500 MW battery at Moss Landing.[14] Southern California Edison currently has several hundred megawatts of BESS deployed in their region with much more in their interconnection queue.[15] **Figure B.1** shows a cursory review of the CAISO interconnection queue (captured in early 2020), where most new interconnection requests are either stand-alone BESS or hybrid plants that consist mainly of solar PV or wind combined with a BESS component. Elsewhere, in ERCOT over 1,600 MW of BESS are expected to be in-service by end of 2021.[16] These types of interconnection requests are observed across North America, and these newly connecting resources will need to operate reliably to provide ERSs and be modeled appropriately. They will also need be studied as part of the interconnection study process.

[8] U.S. Energy Information Administration (EIA), "Annual Energy Outlook 2020 with projections to 2050," Jan. 2020. [Online]: https://www.eia.gov/outlooks/aeo/pdf/aeo2020.pdf.

[9] Hybrid plants combine multiple technologies of generation and energy storage at the same facility, enabling benefits to both the plant and to the BPS. The majority of newly interconnecting hybrid resources are a combination of renewable energy and battery energy storage.

[10] California Senate Bill No. 100: https://leginfo.legislature.ca.gov/faces/billNavClient.xhtml?bill_id=201720180SB100.

[11] https://www.cpuc.ca.gov/General.aspx?id=3462.

[12] Phil Pettingill, "Ensuring RA in Future High VG Scenarios – A View from CA", ESIG Spring Workshop. April 10, 2020.

[13] https://www.lspower.com/ls-power-energizes-largest-battery-storage-project-in-the-world-the-250-mw-gateway-project-in-california-2/

[14] https://pv-magazine-usa.com/2020/08/13/vistra-approved-to-build-a-grid-battery-bigger-than-all-utility-scale-storage-in-the-us-combined/

[15] https://www.edison.com/home/innovation/energy-storage.html

[16] http://www.ercot.com/content/wcm/lists/197386/Capacity_Changes_by_Fuel_Type_Charts_October_2020.xlsx

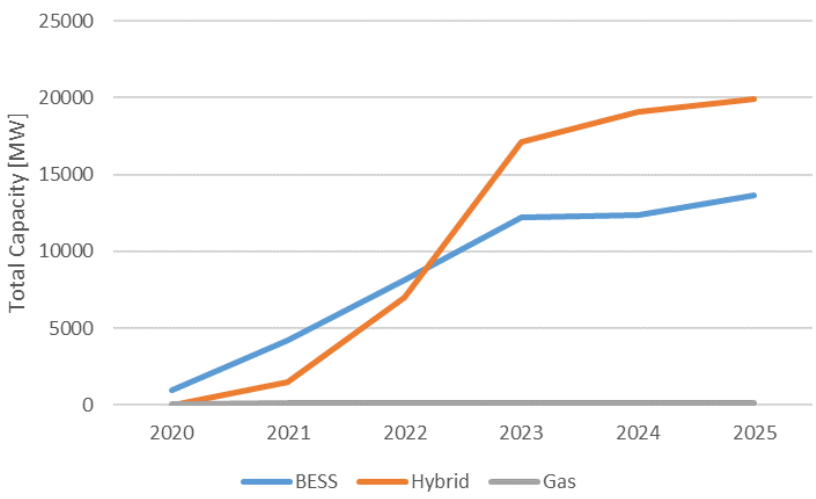

Figure B.1: Review of CAISO Interconnection Queue for Hybrid Resources and BESS

Generation interconnection queues are currently inundated with requests for new interconnections of BESS and hybrid power plants. TPs and PCs need the capabilities to accurately model and study these resources in the interconnection studies and annual planning processes. While early BESS were primarily proposed for energy arbitrage and mitigating renewable resource variability, there has been more recent interest in installing BESS for broader services as a generating resource or even as a source of transmission services such as voltage support under "storage as transmission facility"[17] programs. Therefore, it is imperative to have clear guidance on how BESS and hybrid power plants should perform when connected to the BPS and also to have recommended practices for modeling and studying BESS and hybrid power plants for power flow, stability, short-circuit, and electromagnetic transient (EMT) studies. These types of modeling practices and studies are the primary focus of this guideline.[18]

For the purposes of this guideline, the terms BESS and hybrid plant refer to the resource in its entirety, up to the point of interconnection (POI), including the main power transformers; the terms do not refer only to the individual storage device or converters themselves. As such, both BESS and hybrid plants are considered inverter-based resources.

[17] https://cdn.misoenergy.org/20190109%20PAC%20Item%2003c%20Storage%20as%20a%20Transmission%20Asset%20Phase%20I%20Proposal%20(PAC%20004)307822.pdf

[18] Other types of studies such as harmonics and geomagnetic disturbance studies are outside the scope of this guideline.

Introduction

Fundamentals of Energy Storage Systems

Energy storage can take many different forms, and some are synchronously connected to the grid while others are connected through a power electronics interface (i.e., inverter-based). Examples of different energy storage technologies include, but are not limited to, the following:[19]

- **Battery Energy Storage:** There are many types of BESS: lithium-ion, nickel-cadmium, sodium sulfur, redox flow, and others.[20] Batteries convert stored chemical energy to direct current (dc) electrical energy, and vice versa. Power electronic converters (i.e., inverters) are used to connect the battery to the alternating current (ac) power grid.
- **Pumped Hydroelectric Storage:** Pumped hydroelectric power is one of the most mature and commonly used large-scale electric storage technologies today. Water flowing through a hydroelectric turbine-generator produces electric energy to be used on the BPS. Energy is then stored by sending the water back to the upper reservoir through a pump.
- **Mechanical Energy Storage:** Mechanical systems store kinetic or gravitational energy for later use as electric energy. An example of mechanical energy storage includes flywheels that accelerate a rotor to very high speed and maintain rotational energy using the inertia of the flywheel that can then be delivered to the grid when needed.
- **Hydrogen Energy Storage:** Hydrogen energy storage involves the separation of hydrogen from some precursor material, such as water or natural gas, and storage of the hydrogen in vessels ranging from pressurized containers to underground salt caverns for later use. The hydrogen can later be used to produce electricity with fuel cells or combined-cycle power plants.[21]
- **Thermal Energy Storage:** Thermal energy storage involves heating or cooling a material with a high heat capacity and recovering the energy later using the thermal gradient between the thermal storage medium and the ambient conditions. For example, electric energy could be used to heat volcanic stones that can then be converted back to electric energy by using a steam turbine.[22] Concentrated solar plants use molten salt as thermal storage medium and steam turbines to convert heat to electric energy.
- **Compressed Air Energy Storage:** Compressed air storage contains energy in the form of pressurized air in a geological feature or other facility. Energy can be delivered back to the grid at a later time, usually by heating the pressurized air and sending it through a turbine to generate power.
- **Supercapacitors:** Supercapacitors are high-power electrostatic devices with fast charging and discharging capability (on the order of 1–10 seconds) and low energy density. No chemical reactions occur during charging and discharging, so these units have low maintenance costs, long lifetimes, and high efficiency. These devices are scalable, but their fast response can generally not be sustained due to the low energy density.

There are multiple benefits of BPS-connected energy storage systems, including (but not limited to) the following:

- Providing balancing and fast-ramping services
- Mitigating transmission congestion
- Enabling energy arbitrage to charge during low price periods and discharge during high price periods

[19] https://www.nerc.com/pa/RAPA/ra/Reliability%20Assessments%20DL/Master_ESAT_Report.pdf
[20] https://energystorage.org/why-energy-storage/technologies/solid-electrode-batteries/
[21] https://energystorage.org/why-energy-storage/technologies/hydrogen-energy-storage/
[22] https://www.siemensgamesa.com/products-and-services/hybrid-and-storage/thermal-energy-storage-with-etes

- Providing ERSs like frequency response and dynamic voltage support

Each of the energy storage technologies described can provide benefits to BPS reliability and resilience. As we focus on BESS, the interaction between the battery energy storage device and the electrical grid is dominated by the power electronics interface at the inverter-level and plant controller level, specifically on small time scales (from microseconds to tens of seconds to minutes). The interactions that BESS and hybrid plants have with the BPS is the primary focus of this guideline, and the guidance provided also covers ways that industry can model and study these resources connecting to the BPS.

Fundamentals of Hybrid Plants with BESS

Hybrid power plants are also becoming increasingly popular due to federal incentives, cost savings, flexibility, and higher energy production by sharing land, infrastructure, and maintenance services. Hybrid power plants ("hybrid resources") are defined here as follows:

> **Hybrid Power Plant (Hybrid Resource):** A generating resource that is comprised of multiple generation or energy storage technologies controlled as a single entity and operated as a single resource behind a single POI.

There are many types of hybrid power plants that combine synchronous generation, inverter-based generation, and energy storage systems;[23] however, the most predominant type of hybrid power plant observed in interconnection queues across North America is the combination of renewable energy (solar PV or wind) and battery energy storage technologies.[24] Due to this fact, this guideline concentrates primarily on hybrid plants combining renewable (specifically inverter-based) generation with BESS technology.

The conversion of dc to ac current occurs at the power electronics interface. However, the way this conversion occurs within a hybrid plant impacts how the resource interacts with the BPS, its ability to provide ERSs, how it is modeled, and how it is studied. Hybrid plants can be classified as either of the following:

- **AC-Coupled Hybrid Plants:** An ac-coupled hybrid power plant couples each form of generation or storage at a common collection bus after it has been converted from dc to ac at each individual inverter. **Figure I.1** shows a simple illustration of one possible configuration of an ac-coupled hybrid power plant where a BESS is coupled with a solar PV or wind power plant on the ac side. The BESS may be charged either from the renewable generating component or from the BPS if appropriate contracts and rates are available.
- **DC-Coupled Hybrid Plants:** A dc-coupled hybrid power plant couples both sources at a dc bus tied to the grid via a dc-ac inverter. There are often dc-dc converters between the individual units and the common dc collection bus. **Figure I.2** shows a simple illustration of another possible configuration of a dc-coupled hybrid power plant, where the energy storage component is coupled through a dc-dc converter on the dc side. The dc–ac inverter can be unidirectional where the BESS can only be charged from the renewable resource or bi-directional where the BESS can also be charged from the BPS (depending on interconnection requirements and agreements).[25] There are multiple possible configurations for dc-coupled facilities, particularly on the dc-side between the generating resource, the BESS, and ways they connect through the ac–dc inverter.[26]

[23] Such as natural gas and BESS hybrid plants, combined heat and power with BESS, or multiple types of inverter-based generation technologies.
[24] Note that hybrid natural gas-BESS plants may be desirable in some areas where capacity shortages have been identified.
[25] ERCOT has drafted a concept paper specifically on dc-coupled resources, which may be a useful reference: http://www.ercot.com/content/wcm/key_documents_lists/191191/KTC_11_DC_Coupled_2-24-20.docx
[26] https://www.dynapower.com/products/energy-storage-solutions/dc-coupled-utility-scale-solar-plus-storage/

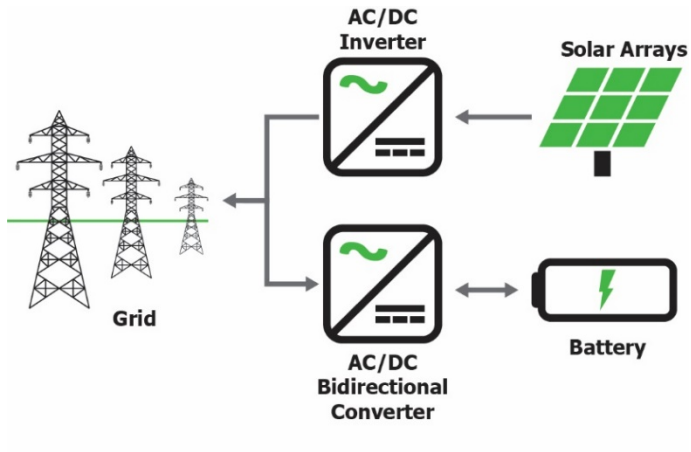

Figure I.1: Illustration of AC-Coupled Hybrid Plant

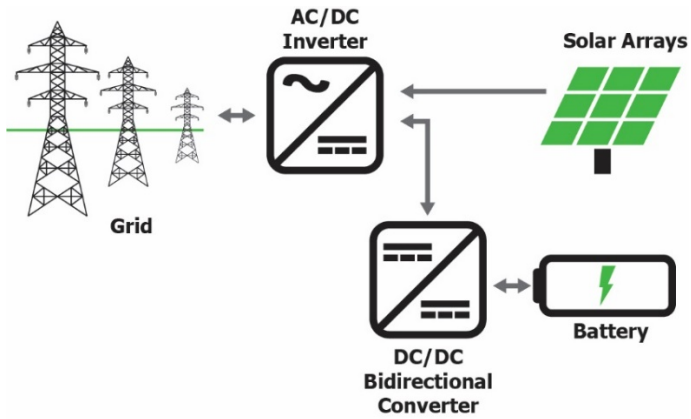

Figure I.2: Illustration of DC-Coupled Hybrid Plant

Different technologies may deploy ac- and dc-coupled systems for different reasons. For example, it may be economical for a solar PV and BESS system to be coupled on the dc-side whereas it may be more cost effective for wind turbine generators to be coupled with a BESS on the ac-side. Each newly interconnecting hybrid will have its reasons for using ac- or dc-coupled technology, which ultimately comes down to which configuration provides the most value for the given installation.

Hybrid plants combine many of the benefits of stand-alone BESS with renewable energy generating resources, including but not limited to the following:[27]

- **Cost Efficiencies:** Integrating different technologies at the same location enables a developer to save on shared electrical, controls, and communications equipment; simplifies siting; allows for shared personnel; improves maintenance schedules; reduces electrical losses associated with ac/dc conversion efficiency (i.e., dc-coupled); and saves on other relevant operational costs.
- **Reduced Interconnection Costs:** In some cases, adding a battery that can charge and discharge on command can reduce interconnection costs for a renewable generator by avoiding overloads on existing transmission equipment or addressing reliability needs that may have required new transmission equipment.

[27] The benefits noted are also generally applicable to stand-alone energy storage devices such as BESS; the benefits noted here focus on how addition of a BESS to a traditional renewable energy-generating project can improve the operational capabilities and flexibility of the resource.

- **Energy Arbitrage:** The storage element in a hybrid plant can be used to charge during low-priced hours and discharge during high-priced hours, shifting energy production to those hours where energy is needed. Current arbitrage for hybrids (and BESS) is on the order of hours and days; future technologies may be able to further shift energy storage and production based on system needs.
- **Excess Energy Harvesting:** Hybrid plants have the added benefit of being able to capture any excess solar or wind production that would otherwise be lost or "clipped" (e.g., due to curtailment or oversizing of PV panels compared to inverter size). Capturing excess energy increases plant capacity factor and enables it to continue operating when the generating resource output decreases.
- **Frequency Response Capability:** Adding energy storage to a renewable facility increases the ability of the plant to respond to underfrequency events while still operating the renewable component at maximum available power (given appropriate interconnection practices and agreements) as well as bringing some certainty to providing this service. Addition of battery storage to a synchronous generator facility may also allow the hybrid plant to provide FFR.[28] The energy storage component can initially charge or discharge rapidly, delivering initial performance of FFR, while the synchronous generator turbine-governor provides a slower, longer-term sustained response.
- **Reduce Generating Fleet Variability:** As higher penetrations of renewable energy resources enter the BPS, higher levels of uncertainty and variability are occurring. This requires additional flexibility in resources. Hybrid plants with the BESS component can be a significant source of fast and flexible energy.

Co-Located Resources versus Hybrid Resources

As described above, a hybrid power plant is "a single generating resource comprised of multiple generation or storage technologies controlled as a single entity and operated as a single resource behind a single POI." Similarly, some transmission entities[29] are differentiating co-located power plants from hybrid plants due to their key differences. Co-located power plants can be defined as follows:

> **Co-Located Power Plants (Co-Located Resources):** Two or more generation or storage resources that are operated and controlled as separate entities yet are connected behind a single POI.

The key difference here is that the units are operated independently from one another even though they may be electrically connected identically to a hybrid resource. This distinction is important when considering how and when these resources will operate as well as how to model and study these resources in operations and planning assessments.

[28] For example, in ERCOT, a BESS was added to a quick-start combustion turbine for participation in ERCOT's Responsive Reserve Service. The combustion turbine is normally offline, and if frequency falls outside of a pre-defined deadband, the BESS will provide FFR until the combustion turbine is turned on to sustain the provided response.

[29] http://www.caiso.com/InitiativeDocuments/RevisedStrawProposal-HybridResources.pdf
http://www.caiso.com/Documents/IssuePaper-HybridResources.pdf

Chapter 1: BPS-Connected BESS and Hybrid Plant Performance

BESS and hybrid plants have similar recommended performance to other BPS-connected inverter-based resources (e.g., wind and solar PV plants). However, there are unique operational and technological differences that need to be considered when describing the recommended performance for these facilities. The NERC *Reliability Guideline: BPS-Connected Inverter-Based Resource Performance*[30] provided a foundation of recommended performance for BPS-connected inverter-based resources, including BESS and hybrid plants; however, it did not go into the technical details for these resources. This chapter describes the specific technological considerations that should be made when describing the recommended performance for these resources in more depth.

The IEEE P2800 effort currently underway to standardize the performance of newly-interconnecting inverter-based resources, including BESS and hybrid plants, will likely address many of these issues. However, in the meantime, TOs, TPs, and PCs are strongly encouraged to improve their interconnection requirements and study processes by adopting and integrating the recommended performance characteristics outlined in this guideline.

Key Takeaway
Until the publication and widespread adoption of future IEEE Standard 2800 (being developed by the IEEE P2800 project), TOs, TPs, and PCs are strongly encouraged to improve their interconnection requirements and study processes by adopting and integrating the recommended performance characteristics outlined in this guideline.

Recommended Performance and Considerations for BESS Facilities

Table 1.1 provides an overview of the considerations that should be made when describing the recommended performance of BESS facilities compared with other BPS-connected inverter-based generating resources. The following sub-section elaborates on these high-level considerations in more detail.

Table 1.1: High Level Considerations for BESS Performance

Category	Specifications and Comparison with BPS-Connected Inverter-Based Generators
Momentary Cessation	No significant differences from other BPS-connected inverter-based generating resources; momentary cessation should not be used to greatest possible extent[31] during charging and discharging operation.
Phase Jump Immunity	No significant difference from other BPS-connected inverter-based generating resources.
Capability Curve	The capability curve of a BESS extends into both the charging and discharging regions to create a four-quadrant capability curve. The shape of many individual BESS inverter capability curves is almost[32] symmetrical for charging and discharging. From an overall plant-level perspective, the capability curves may be asymmetrical. System-specific requirements may not necessitate the use of the full equipment capability; however, the resources should not be artificially limited from providing its full capability (particularly reactive capability) to support reliable operation of the BPS. See **Capability Curve** section for more information.

[30] https://www.nerc.com/comm/PC_Reliability_Guidelines_DL/Inverter-Based_Resource_Performance_Guideline.pdf
[31] Unless there is an equipment limitation or a need for momentary cessation to maintain system stability. The former has to be communicated by the GO to the TP while the latter has to be validated by extensive studies.
[32] The capability curve is almost symmetrical because when the BESS is operated in the second and third quadrant (consuming active power), a rise in dc voltage could limit the amount of power absorption or consumption where reactive power also has to be consumed.

Table 1.1: High Level Considerations for BESS Performance	
Category	**Specifications and Comparison with BPS-Connected Inverter-Based Generators**
Active Power-Frequency Control	Active power-frequency controls can be extended to the charging area of operation for BESS. The conventional droop characteristic can be used in both discharging and charging modes. Furthermore, a droop gain[33] and deadband should be used in both operating modes, and there should be a seamless transition between modes (i.e., there should not be a deadband in the power control loop for this transition) unless interconnection requirements or market rules preclude such operation. As with all resources, speed of response[34] of active power-frequency control to support the BPS should be coordinated with system needs. The fast response of BESS to frequency deviations can provide reliability benefits. Consistent with FERC Order 842, there should be no requirement for BESS resources to provide frequency response if the state of charge (SOC) is very low or very high (which may be specified by the BA), though that service can be procured by the BA. See **Active Power-Frequency Control** section for more information.
Fast Frequency Response	BESS are well-positioned to provide FFR to systems with a high rate-of-change-of-frequency (ROCOF) due to not having any rotational components (similar to a solar PV facility). The need for FFR is based on each specific Interconnection's need.[35] Sustained forms of FFR help arrest fast frequency excursions and overall frequency control. BESS are likely to be able to provide sustained FFR within their SOC constraints. With the ability for BESS to rapidly change MW output across their full charge and discharge ranges (within SOC limits), BPS voltage fluctuations should be closely monitored, especially on systems with lower short-circuit ratios. See **Fast Frequency Response** section for more information.
Reactive Power-Voltage Control	BESS should be configured to provide dynamic voltage control during both discharging and charging operations to support BPS voltages during normal and abnormal conditions. TOPs should provide a voltage schedule (i.e., a voltage set point and tolerance) to all BESS, applicable to both operating modes.
Reactive Current-Voltage Control	No significant difference from other BPS-connected inverter-based generating resources. BESS should be configured to provide dynamic voltage support during large disturbances both while charging and discharging.
Reactive Power at No Active Power Output	No significant difference from other BPS-connected inverter-based generating resources.

[33] Droop should be set using the same base for both charging and discharging mode of operation (i.e., rated active power, P_{max}), so that the same rate of response is provided regardless of charging or discharging.

[34] Speed of response is dictated by the controls programmed into the inverter-based resource (most commonly in the plant-level controller), which is a function of the time constants and gains used in the proportional-integral controls as well as the droop characteristic.

[35] NERC, "Fast Frequency Response Concepts and Bulk Power System Reliability Needs," March 2020: https://www.nerc.com/comm/PC/InverterBased%20Resource%20Performance%20Task%20Force%20IRPT/Fast_Frequency_Response_Concepts_and_BPS_Reliability_Needs_White_Paper.pdf

Table 1.1: High Level Considerations for BESS Performance	
Category	**Specifications and Comparison with BPS-Connected Inverter-Based Generators**
Inverter Current Injection during Fault Conditions	BESS should be configured to provide fault current contribution during large disturbance events that can support legacy BPS protection and stability.[36] Inverter limits will need to be met, as with all inverter-based resources; however, SOC may not be an issue for providing fault current for BESS since faults are typically cleared in fractions of a second. Additionally, limits on dc voltage magnitude can apply. See **Inverter Current Injection during Fault Conditions** section for more information.
Return to Service Following Tripping	BESS should return to service following any tripping or other off-line operation by operating at the origin (no significant exchange of active or reactive power with the BPS) and then ramp back to the expected power output. This is a function of plant settings and interconnection requirements set by the BA or TO.
Balancing	No significant difference from other BPS-connected inverter-based generating resources. The capability to provide balancing services for the BPS should be available from all BESS. BAs, TPs, PCs, and RCs should ensure requirements are in place for appropriate balancing of the BPS.
Monitoring	No significant difference from other BPS-connected inverter-based generating resources.
Operation in Low Short-Circuit Strength Systems	No significant difference from other BPS-connected inverter-based generating resources. BESS should utilize grid forming operation, as appropriate (see below), to support BPS stability and reliability in low short-circuit strength operating conditions.
Grid Forming	BESS have the unique capabilities to effectively deploy grid forming technology to help improve BPS reliability in the future of high penetration of inverter-based resources. Key aspects that enable this functionality include availability of an energy buffer to be deployed for imbalances in generation and load, low communication latency between different layers of controllers, and robust dc voltage that enables synthesis of an ac voltage for a wide variety of system conditions. In grids where system strength and other stability issues are of concern, BESS may be required to have this capability to support reliable operation of the BPS. TPs and PCs should develop interconnection requirements and new practices, as needed, to integrate the concepts of grid forming technology into the planning processes. See **Grid Forming** section for more information.
Fault Ride-Through Capability	No significant difference from other BPS-connected inverter-based generating resources. BESS should have the same capability to ride through fault events on the BPS when point of measurement (POM) voltage and frequency is within the curves specified in the latest effective version of PRC-024.[37] This applies to both charging and discharging modes; unexpected tripping of generation or load resources on the BPS will degrade system stability and adversely impact BPS reliability. Ride-through capability is a fundamental need for all BPS-connected resources such that planning studies can identify any expected risks. However, the behavior during ride-through while discharging and charging may be different.

[36] Large disturbance fault current contribution from inverter-based resources can help ensure BPS protection schemes operate appropriately by ensuring they have appropriate voltage-current relationships of magnitude and phase angles (i.e., appropriate positive and negative sequence current injection).

[37] Unless there is an equipment limitation, which has to be communicated by the GO to the TP.

Table 1.1: High Level Considerations for BESS Performance	
Category	**Specifications and Comparison with BPS-Connected Inverter-Based Generators**
System Restoration and Blackstart Capability	BESS may have the ability to form and sustain their own electrical island if they are to be designated as part of a blackstart cranking path. This may require new control topologies or modifications to settings that enable this functionality. Blackstart conditions may cause large power and voltage swings that must be reliably controlled and withstood by all blackstart resources (i.e., operation under low short circuit grid conditions). For BESS to operate as a blackstart resource, assurance of energy availability as well as designed energy rating that ensures energy availability for the entire period of restoration activities is required. At this time, it is unlikely that most legacy BESS can support system restoration activities as a stand-alone resource; however, they may be used to enable start-up of subsequent solar PV, wind, or synchronous machine plants. See **System Restoration and Blackstart Capability** section for more information.
Protection Settings	No significant difference from other BPS-connected inverter-based generating resources.
State of Charge *(new)*	The SOC of a BESS affects the ability of the BESS to provide energy or other ERSs to the BPS at any given time.[38] In many cases, the BESS may have SOC limits that are tighter than 0–100%[39] for battery lifespan and other equipment and performance considerations. SOC limits affect the ability of the BESS to operate as expected, and any SOC limits will override any other ability of the BESS to provide ERSs or energy to the BPS. These limits and how they affect BESS operation should be defined by the equipment manufacturers and plant developer, agreed upon by the GO, and provided to the BA, TOP, RC, TP, and PC. See **State of Charge** section for more information.
Oscillation Damping Support	BESS can have the capability of providing damping support similarly to synchronous generators and HVDC/FACTS facilities. BPS-connected inverter-based resources could also provide damping support. A major difference from other BPS-connected inverter-based resources is that BESS can operate in the charging mode in addition to the discharging mode, which provide greater capabilities of damping support.

Topics with Minimal Differences between BESS and Other Inverter-Based Resources

The following topics have minimal difference between the recommended performance of BESS and other BPS-connected inverter-based resources:

- **Momentary Cessation:** To the greatest possible extent,[40] BESS should not use momentary cessation as a form of large disturbance behavior when connected to the BPS. Any existing BESS that use momentary cessation should eliminate its use to the extent possible, and its use for newly interconnecting BESS should be disallowed by TOs in their interconnection requirements. Sufficiently fast dynamic active and reactive current controls are more suitable.[41] If voltage at the POM is outside the curves specified in the latest effective version of PRC-024, then momentary cessation may be used to avoid the BESS tripping. However, momentary cessation should not be used inside the curves, subject to limitations for legacy equipment. This recommendation applies for both charging and discharging operation.
- **Phase Jump Immunity:** Similar to other inverter-based resources, BESS should be able to withstand all expected phase jumps on the BPS; this applies during both charging and discharging operation. Efforts such

[38] https://www.nrel.gov/docs/fy19osti/74426.pdf
[39] Or the values 0% and 100% can simply be defined as the normally allowable range of operation.
[40] Unless there is an equipment limitation or a need for momentary cessation to maintain system stability. The former has to be communicated by the GO to the TP while the latter has to be validated by extensive studies.
[41] In rare cases, momentary cessation may be admissible based on reliability studies performed by the TP and PC on a case-by-case basis.

as P2800 may help standardize expected thresholds for newly interconnecting inverters to be able withstand in terms of phase jump immunity. In the meantime, the TO (in coordination with their TP and PC) should clearly specify what this expectation is so that newly interconnecting projects can test their performance against worst-case expected phase jumps during grid events.

- **Reactive Current-Voltage Control (Large Disturbances):** Fundamentally, there are no significant differences between BESS and other BPS-connected inverter-based resources with respect to reactive current-voltage control during large disturbances. BESS inverters should maintain stability, adhere to inverter current limits, and provide fast dynamic response to BPS fault events in both charging and discharging modes. Transitions from charging to discharging (e.g., caused by active power-frequency controls) during large disturbances should not impede the BESS from dynamically supporting BPS voltage and reactive current injection. Studies should ensure stable performance for charging and discharging.
- **Reactive Power at No Active Power Output:** BESS should have capability to provide dynamic reactive power to support BPS voltage while not discharging or charging active power. This is one of the benefits of inverter-based technology and can be utilized by grid operators to help regulate BPS voltages. Every BESS should have the capability to perform such operation, and the actual use of such capability should be coordinated with the TOP and RC regarding any voltage regulation requirements and scheduled voltage ranges.
- **Return to Service Following Tripping:** BESS should adhere to any requirements set forth by its respective BA. In general, following any tripping or other off-line operation, BESS should return to service starting at their origin point on the capability curve (i.e., operation at no active or reactive power loading) and then ramp to their expected operating point based on recommendations or requirements provided by the BA (or TO in their interconnection requirements).
- **Balancing:** All BESS should have the capability to provide balancing services to the BA for the purposes of ensuring BPS reliability. BAs, TPs, PCs, and other applicable entities should understand what services BESS provide; however, the all BESS should have the capability to provide the BA with balancing services.
- **Monitoring:** BESS should be equipped with equipment that provides the functionality of a digital fault recorder (DFR), dynamic disturbance recorder, sequence of events recorder, harmonics recorder, and battery management system[42] monitoring capability. TOs (in coordination with the TOP, TP, and PC) should include clear requirements and specifications for the types of data needed for BESS facilities (and other inverter-based resources).
- **BESS Stability:** Appropriate studies should be conducted to ensure that the BESS will operate stably in its electrical environment and in any of its operating modes. For example, if the short-circuit strength is low, the TP and PC should study the operation of the hybrid resource in detail with EMT simulations as appropriate. Studies should also be conducted to ensure that no instability modes exist at higher frequencies. In addition, the ability of newly interconnecting BESS to operate with grid forming technology[43] (described below) enable BESS to operate in very low short-circuit strength networks and further provide BPS support beyond other grid-following inverter-based resources. Refer to recommendations from NERC *Reliability Guideline: BPS-Connected Inverter-Based Resource Performance* as well as NERC *Reliability Guideline: Integrating Inverter-Based Resources into Low Short Circuit Strength Systems*.[44]

[42] System-level BMS data related to SOC and state of health (SOH) should be accessible to the GOP, TOP, and RC (as deemed necessary) for independent evaluation to verify accuracy of reported metrics, assess operational issues, and correct any apparent miscalculations. All critical data and metrics (e.g., SOC and SOH) of the battery management system should have accuracy requirements established by the GO, which could be based on equipment standards (where applicable).

[43] There are different types of control topologies or definitions that could be considered "grid forming." Inverter manufacturers are beginning to offer commercial products that can support the BPS more broadly using these capabilities.

[44] https://www.nerc.com/comm/PC_Reliability_Guidelines_DL/Item_4a._Integrating%20_Inverter-Based_Resources_into_Low_Short_Circuit_Strength_Systems_-_2017-11-08-FINAL.pdf

- **Fault Ride-Through Capability:** BESS, like other BPS-connected inverter-based resources, should have the capability to ride through voltage and frequency disturbances when RMS voltage at the POM is within the curves of the latest effective version of PRC-024, subject to limitations for legacy equipment. Ride-through performance requirements should apply to both charging and discharging modes since unexpected tripping of any generation or load resources on the BPS will degrade system stability and adversely impact BPS reliability. Ride-through capability is a fundamental need for all BPS-connected resources such that planning studies can identify any expected risks.
- **Protection Settings:** Appropriate protections should be in place to operate BESS facilities safely and reliably when connected to the BPS. To ensure proper site coordination with the interconnecting TO, protection settings should be clearly documented and provided to the TO for approval by the BESS owner. Additionally, BESS owners should provide protection settings to their TP, PC, TOP, RC, and BA to ensure all entities are aware of expected performance of the BESS during planning and operations horizons.[45]

Refer to the recommendations outlined in NERC *Reliability Guideline: BPS-Connected Inverter-Based Resource Performance*[46] for more details on each of the aforementioned subjects. The following sub-sections outline the additional topics from **Table 1.1** that warrant additional details and where BESS have specific considerations that need to be taken.

Capability Curve

BESS are generally four-quadrant devices that extend into the charging region. BESS inverters may be nearly symmetrical[47] (see **Figure 1.1**). From an overall plant-level perspective, the capability curves may be asymmetrical and further impacted by collector system losses and any dependencies on external factors, such as ambient temperature (if applicable). Capability curves should ensure the capture the gross and net ratings of the facility that accounts for station service, losses, and other factors. Capability curves for the overall BESS should be provided by the GO to the TO, TP, PC, TOP, and RC to ensure sufficient understanding of the capabilities of the BESS to provide reactive power under varying active power outputs.

[45] See NERC Reliability Standard PRC-027-1: https://www.nerc.com/_layouts/15/PrintStandard.aspx?standardnumber=PRC-027-1&title=Coordination%20of%20Protection%20Systems%20for%20Performance%20During%20Faults&Jurisdiction=United%20States
See NERC System Protection and Control Working Group technical reference document, *Power Plant and Transmission System Protection Coordination*: https://www.nerc.com/comm/PC/System%20Protection%20and%20Control%20Subcommittee%20SPCS%2020/SPCS%20Gen%20Prot%20Coordination%20Technical%20Reference%20Document.pdf

[46] https://www.nerc.com/comm/PC_Reliability_Guidelines_DL/Inverter-Based_Resource_Performance_Guideline.pdf

[47] Due to effects of BESS dc voltage and inverter derating due to temperature and altitude impacting reactive and active power output.

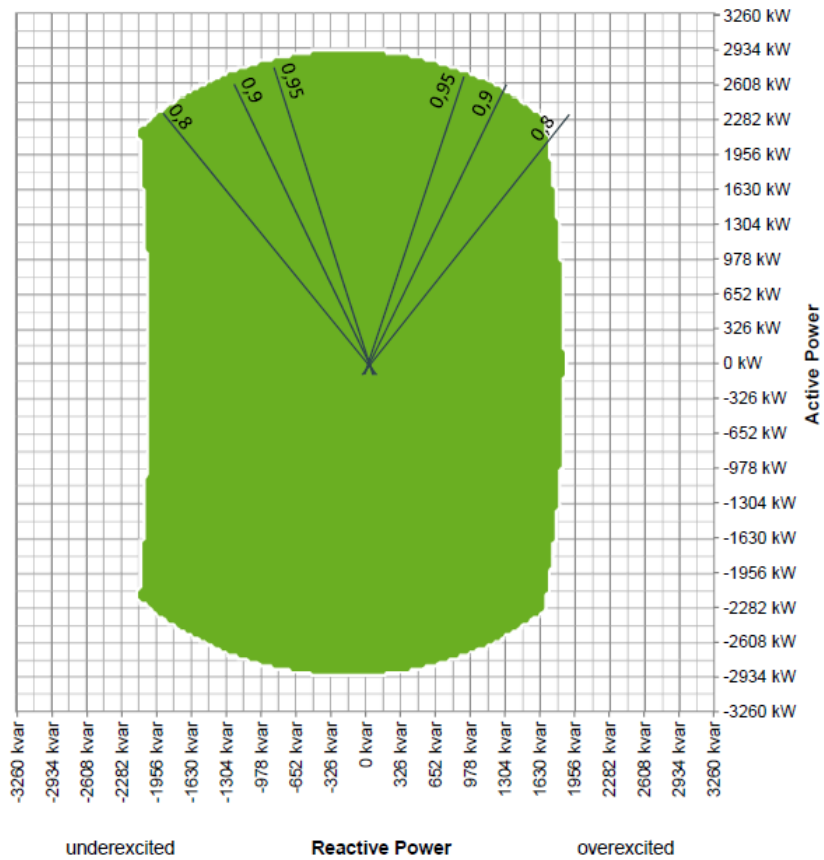

Figure 1.1: Example of 2.7 MVA BESS Capability Curve [Source: SMA America]

Active Power-Frequency Control

BESS should have the capability to provide active power-frequency control that extends to the charging region; the conventional droop characteristic can be extended into this region, and operation along the droop characteristic can occur naturally. Deadbands, droop settings, and other response characteristics should be specified by the BA based on studies performed by TPs and PCs. The droop characteristic and deadbands should be symmetrical, meaning same settings for charging and discharging modes. Droop should be set using the same base for both charging and discharging mode of operation (i.e., rated active power, P_{max}) so that the same rate of response is provided regardless of operation mode (charging/discharging). Any transition between charging and discharging modes of operation should occur seamlessly (i.e., a continuous smooth transition between charging and discharging). The speed of response should also be coordinated with the BA based on primary frequency response needs. Consistent with FERC Order 842, there should be no requirement for BESS resources to maintain a specific SOC for provision of frequency response. Any active power-frequency control should be sustained unless the BESS SOC limits power consumption or injection from the resource. However, the capacity and energy needed to support interconnection frequency control is relatively small and for short period; the BA may specify sustaining times. The number of times active power-frequency controls change power output outside of the defined deadbands will have a small but finite impact on battery lifespan depending of the technology used.

Fast Frequency Response

As the instantaneous penetration of inverter-based resources continues to increase, on-line synchronous inertia may decrease and rate-of-change of frequency (ROCOF) may continue to increase. High ROCOF systems may be faced with

the need for faster-responding resources to ensure that unexpected underfrequency load shedding (UFLS) operations do not occur.[48]

BESS have the capability of providing FFR to counter rapid changes in frequency due to disturbances on the BPS. Similar to solar PV, there are no rotational elements and therefore the active power output is predominantly driven by the controls that are programmed into the inverter. BESS should have at least the following functional capabilities that may be utilized if the BESS is within SOC and set points limits consistent with FERC Order 842:

- Configurable and field-adjustable droop gains, time constants, and deadbands within equipment limitations; tuned to the requirements or criteria specified by the BA
- Real-time monitoring of BESS SOC to monitor performance limitations imposed on FFR capabilities
- The ability to provide a specified power response for a predetermined time profile in coordination with primary frequency response as defined by the BA

Many different simulations can be performed to show the benefits of utilizing BESS for improving frequency response, particularly improving the nadir of system frequency following a large loss of generation. **Figure 1.2** illustrates one study demonstrating these affects. The blue trace shows the response following a large generation loss for a synchronous-based system. The red plot shows the same system (with same amount of reserves) with the synchronous generation replaced with BESS (with one option of frequency control enabled). The green plots show the system with BESS with a different frequency control logic and tuned appropriately. The system dominated by synchronous machines exhibits an initial inertial response followed by a slower turbine-governor response. On the other hand, while the BESS system does not have physical inertia like a synchronous machine, its controls can be tuned to provide a suitably fast injection of energy such that the initial ROCOF remains nearly the same (or even improves) and the frequency nadir is significantly improved. Note that voltages should be monitored closely as high-speed active power responses can cause high-speed voltage fluctuations, especially in low short-circuit-ratio conditions.

[48] https://www.nerc.com/comm/PC/InverterBased%20Resource%20Performance%20Task%20Force%20IRPT/Fast_Frequency_Response_Concepts_and_BPS_Reliability_Needs_White_Paper.pdf

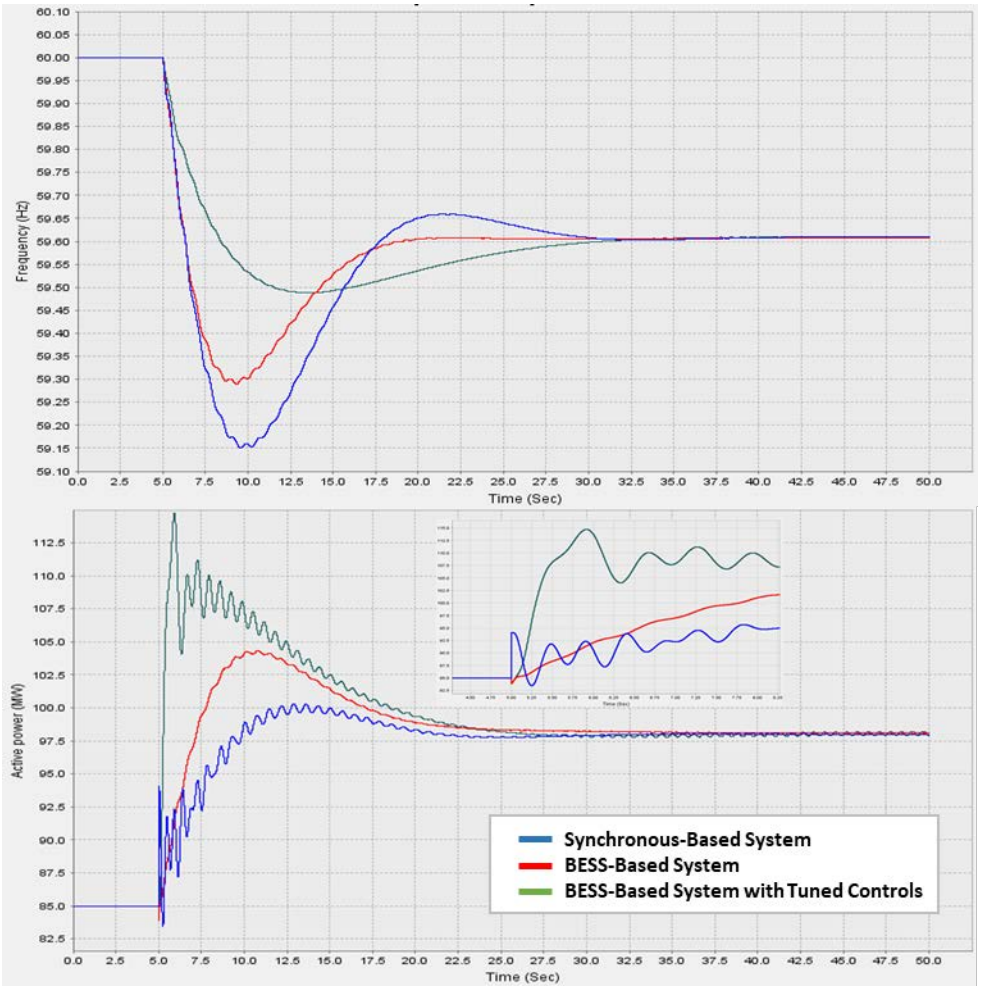

Figure 1.2: Demonstration of Impacts of a BESS on Frequency Response [Source: EPRI]

Reactive Power-Voltage Control (Normal Conditions and Small Disturbances)

BESS should have the capability to provide reactive power-voltage control in both charging and discharging modes; however, it is useful to separate out the recommendations into each mode of operation:

- **Discharging Operation:** There are no significant differences between BESS during discharge operation and other BPS-connected inverter-based generators with respect to reactive power-voltage control. BESS should have the ability to support BPS voltage control by controlling their POM voltage within a reasonable range during normal and abnormal grid conditions. Refer to the recommendations from the NERC *Reliability Guideline: BPS-Connected Inverter-Based Resource Performance*.
- **Charging Operation:** BESS should have the capability to control POM voltage during normal operation and abnormal small disturbances on the BPS while operating in charging mode. The ability for resources consuming power to support BPS voltage control adds significant reliability benefits to the BPS and may be required by TOs as part of their interconnection requirements or by BAs, TOPs, or RCs for BPS operations.

As the resource transitions from charging to discharging modes of operation (or vice versa) or operates at zero active power output while connected to the BPS, the BESS should have the capability and operational functionality enabled to continuously control BPS voltage. This should be coordinated with any requirements established by the TO or TOP.

Inverter Current Injection during Fault Conditions

BESS should behave similar to other inverter-based resources during fault conditions in terms of active and reactive current injection. Active and reactive current injection during severe fault events should be configured to support the BPS during and immediately following the fault event such that legacy BPS protection can operate as expected and the BPS can remain stable during and after the event. Inverter-based resources, including BESS, should ensure that the appropriate voltage-current relationships of magnitude and phase angles (i.e., appropriate positive and negative sequence current injection) are applied. Inverter current limits should be adhered to in order to avoid unnecessary tripping of inverters during fault events. Injection of current during and immediately after faults should be configured to enable the inverter-based resource to remain connected to the BPS and support BPS reliability.

BESS will need to ensure adherence to SOC limits. BPS fault typically persist for fractions of a second, and SOC should typically not be a concern; however, the SOC limits are always in effect and closely monitored by BESS. If necessary, it may be possible to reserve a minor amount of energy for transient response to fault conditions.

The reactive current injection during fault conditions while the BESS is charging or discharging will depend on the specific inverter controls and settings as well as the BESS PQ curve and its symmetry; in either case, dynamic reactive current injection should support BPS voltages in both operating states. Furthermore, controls should be configured for each specific installation such that voltage control (i.e., reactive current injection) has priority and the BESS can stably recover active current output very quickly. Typically, this should occur in less than one second; however, this will need to be studied by the TP and PC and configured accordingly.

Grid Forming

Most commercially available inverters currently require an external source to provide a reference voltage to which the inverter phase-locks. These inverters are termed "grid-following."[49] An alternative option is to control the BESS in a way that it does not rely on external system strength for stable operation (i.e., termed "grid-forming").[50] While there is currently no standard industry definition for grid-forming technology, a broad definition can be as follows:

> **Grid Forming:** An inverter operating mode that enables reliable, stable, and secure operation when the inverter is operating on a part of the grid with few (or zero) synchronous machines along with the possibility of weak or non-existent ties to the rest of the bulk power system.

Four key aspects that enable achieving this operation mode are the following:

- Availability of an "energy buffer" to be deployed for imbalances in generation and load
- Ability of the inverter to contribute towards regulation of voltage and frequency
- Minimal communication latency between different layers of controllers
- A robust dc voltage that enables synthesis of an ac voltage for a wide variety of system conditions.

BESS have these attributes and can effectively employ grid-forming technology to improve BPS performance in the future as penetrations of inverter-based resources continues to grow. Operation in grid-forming mode may help support BPS reliability and inverter stability during low short-circuit strength conditions. The capability to enable this feature should be provided by all future BESS and utilized by the TP and PC as a possible solution option if necessary to mitigate reliability issues that would otherwise result in costly reinforcement projects. However, the application

[49] If short-circuit strength falls too low (i.e. the apparent fundamental-frequency impedance of the grid source becomes too high due to high impedance or lack of available fault current), then the sensitivity of the POM voltage to the active and reactive current injection of the inverter-based resource increases and grid-following inverters can be susceptible to instability or control malfunction. There are multiple mitigation options for these low short-circuit strength issues to help stabilize the ac voltage.

[50] https://www.epri.com/research/products/000000003002018676

of grid-forming technology is unlikely to be the sole solution that addresses all issues and should be used in coordination with other possible solutions.

Tesla's Grid-Forming + Grid Following Philosophy

Tesla BESS are currently utilizing a concept of "grid-forming + grid-following" where the BESS is able to provide both functionalities based on BPS reliability needs. When the BESS is operating in virtual machine mode, the dynamics of a virtual synchronous condenser are added to the output of the current-source inverter (see **Figure 1.3**). In a high short-circuit strength grid, the virtual machine remains naturally inert and preserves the rapid, precisely controllable behaviors of traditional inverter controls. On a lower short-circuit strength grid, the machine model reinforces grid strength by providing subcycle phase response, voltage stability, and fast fault current injection that helps in smooth transitions between different operating states. With such a hybrid approach, the BESS remains responsive to active and reactive power dispatch commands while providing ERSs to the BPS during dynamic grid events. While there are many possible ways to accomplish grid-forming capabilities, Tesla has implemented this feature into its products in an effort to support BPS operation with decreased inertia and overall system strength.

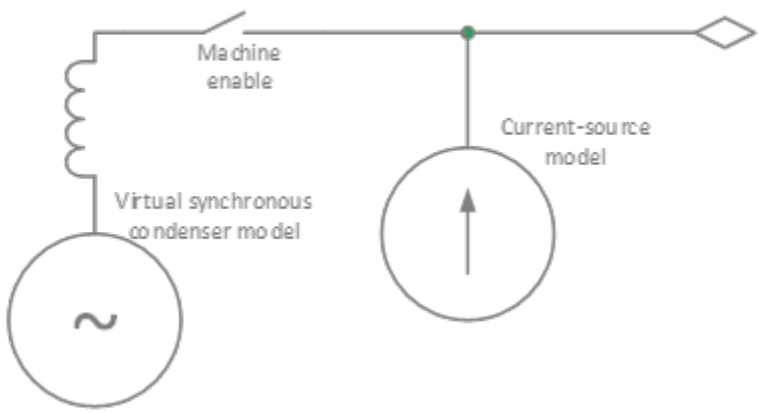

Figure 1.3: Concept of Tesla "Grid-Forming + Grid-Following" Mode [Source: Tesla]

System Restoration and Blackstart Capability

In the event of a large-scale outage caused by system instability, uncontrolled separation, or cascading, system operators are tasked with executing blackstart plans to re-energize the BPS and return electric service to all customers. This process is relatively slow as the blackstart plan identifies the boundaries of outage conditions, system elements, critical loads, etc.; reconnects pre-defined generators and load points to the overall BPS; and carefully resynchronizes regions or portions of the BPS. Throughout this entire process, grid operators are closely balancing generation and demand as well as managing BPS voltages within operating limits. In order to actively participate in blackstart and system restoration, a BESS will need to perform the following:

- Generate its own voltage and seamlessly synchronize to other portions of the BPS
- Stably operate during large frequency, voltage, and power swings, and reliably operate in low short-circuit strength networks and detailed EMT studies that demonstrate the ability to operate under these conditions should be conducted
- Provide sufficient inrush current to energize transformers and transmission lines and start electric motors that necessitates the need to coordinate the BESS resource with the blackstart load; note that BESS, like other inverter-based resources, have limited ability to provide high levels of inrush current

- Have assurance that the BESS will be available immediately after a large-scale outage requiring system restoration activities; BESS will need to be available for their RC and TOP at any point in time to be considered as a blackstart resource
- Have sufficient energy to remain on-line and operational for the time required to ensure blackstart plans can be fully executed.[51] Therefore, BESS energy ratings should be designed to achieve the required periods and their states of charge should be maintained above a limit to ensure enough energy is available for blackstart purposes
- Be able to quickly respond to and control fluctuations in system voltage and frequency
- Be able to start rapidly to minimize system restoration times
- Have redundancy to self-start in the event of any failures within the facility
- Make all control design, settings, configurable parameters, and accurate models available to the BA, TP, PC, TOP, and RC (in order to ensure proper integration into the overall system blackstart scheme and coordination between resources via appropriate engineering studies)
- Have remote startup and operational control capabilities to avoid requiring dispatch of personnel to the field

State of Charge

SOC represents the present level of charge of an electric battery relative to its capacity, within the range of fully discharged (0%) to fully charged (100%). Refer to the description of FERC Order No. 841 in Appendix A. The SOC of a BESS affects the ability of the BESS to provide energy or other ERSs to the BPS at any given time.[52] In many cases, the BESS may have SOC limits that are tighter than 0–100% for battery lifespan and other equipment and performance considerations. Alternatively, 0% and 100% may be defined as the normal range of operation, ignoring the extreme-but-not-recommended charge and discharge levels.

In terms of performance, the following should be considered for the capability and operation of a BESS:

- **Provision of ERSs to the BPS:** All BESS should have the capability to provide ERSs, such as voltage support, frequency response, and ramping capabilities, to support BPS operation. However, each BESS will be configured to provide any one or multiple ERS during on-line operation, based on real-time dispatch, SOC, and system needs.
- **Nearing SOC limits:** As a BESS approaches its SOC limits, the BESS will ramp down its charging or discharging. This ramp should be clearly defined by the owner of the BESS and communicated to the BA, TOP, and RC.
- **SOC Limits and Frequency Response:** Consistent with FERC Order 842, there should be no requirement for BESS resources to maintain a specific SOC for provision of frequency response.
- **SOC Limits and Reactive Power Support:** Through the full range of SOC limits (i.e., SOC_{min} to SOC_{max}), the BESS should be designed to provide full reactive power capability as required by the interconnection agreement. SOC limits should not impact reactive power capability.
- **SOC Limits and Blackstart Capabilities:** SOC should be maintained above a limit to ensure there is energy to fully execute a blackstart process as designed.

SOC limits affect the ability of the BESS to operate as expected, and any SOC limits will override any other ability of the BESS to operate. These limits and how they affect BESS operation should be defined by the equipment

[51] This is defined by the TOP and RC. For example, PJM has requirements for blackstart resources to be operational for 16 hours: http://www.pjm.com/-/media/markets-ops/ancillary/black-start-service/pjm-2018-rto-wide-black-start-rfp.ashx?la=en
[52] https://www.nrel.gov/docs/fy19osti/74426.pdf

manufacturer, agreed upon by the BESS owner, and provided to the BA, TOP, and RC. For planning assessments, this information is also important to the TP and PC as they establish planning cases.

The SOC of any BESS depends on the past operating conditions of the BESS and the services it is providing to the BPS. To study BESS SOC, a time series (or quasi-dynamic) study can be used. **Figure 1.4** shows an example of a BESS that provides two services: peak shaving (charging in morning and discharging at night) and transmission line congestion management around a set of wind power plants. The magnitude and duration of any other service provided by the BESS (such as voltage control or frequency support capability) revolves around the two primary services. **Figure 1.4** shows the evolution of the BESS SOC over two days, evaluated at half-hour time steps but with tracking of the dynamic evolution of the SOC.

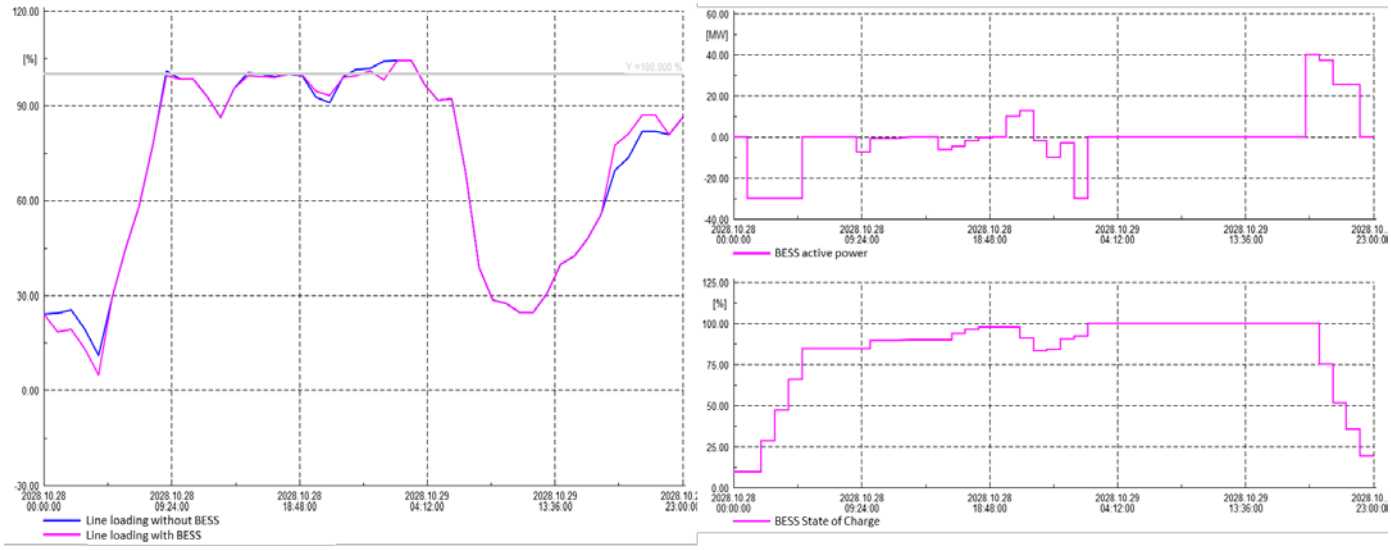

Figure 1.4: Example Time Series of BESS State of Charge [Source: EPRI]

The assumption used in dynamic stability simulations is that SOC will not affect or limit the response of the BESS for short-duration events (i.e., faults or short-term frequency excursions). However, longer-term issues, such as thermal overload mitigation, may require more extensive information regarding BESS SOC. BESS manufacturers establish a full operating range of the batteries (i.e., 0–100% SOC); however, the equipment manufacturer may establish a tighter range (e.g., 5–95% SOC) as the full operating range and this information may be provided to the GO or developer. The full operating range of the BESS should be provided to the RC, TOP, BA, TP, and PC for inclusion in tools and studies. It is important that the SOC base value (i.e., what establishes the operational 0–100% SOC) be well-defined by the appropriate entities.

Oscillation Damping Support

Many synchronous generators are equipped with power system stabilizers (PSSs) that provide damping to system oscillation typically in the range of 0.2 Hz to 2 Hz. As these resources become increasingly limited (either retire or are off-line during certain hours of the day), there is a growing need for oscillation damping support in certain parts of the BPS. For example, in the West Texas area of the ERCOT footprint where significant amounts of renewable generation resources connect, synchronous generators in West Texas may be off-line under a high renewable output condition and could lead to insufficient damping support required to maintain stability for high power long distance power transfer during and after large disturbances. Currently, renewable generation resources are not required to provide damping support in ERCOT, and synchronous condensers typically are not equipped with PSS. A study conducted by ERCOT in 2019 identified oscillatory responses around 1.8 Hz between synchronous condensers in the

Panhandle area and other synchronous generators far away from the Panhandle area under a high renewable generation penetration condition with large power transfers to electrically distant load centers.[53]

Newly interconnecting BPS-connected IBRs should have the capability to provide power oscillation damping controls. A major difference from BPS-connnected inverter-based resources is that BESS can operate in the charging mode in addition to the discharging mode, which provide greater capabilities of damping support. TPs and PCs may identify a reliability need for this type of control as the penetration of inverter-based resources continues to increase. At that time, TOs should develop requirements to ensure that the capability is activated and properly damps power oscillations in the range of 0.2 Hz to 2 Hz (typically) when the resources are on-line and operational. Newly interconnecting facilities require detailed studies that would ensure the controls provide oscillation damping as intended. Controls may need to be tuned (and possibly retuned after interconnection) for optimal performance as the grid evolves over time. These types of studies are critical to ensure reliable operation of the BPS over time. TOs should ensure interconnection requirements suitably address this functionality such that the capabilities can be utilized when needed.

Recommended Performance and Considerations for Hybrid Plants

Hybrid power plants, as described in the Introduction, include both dc-coupled and ac-coupled facilities. In terms of describing the nuances and differences across technologies and configurations, it is useful to differentiate between ac- and dc-coupled plants. Therefore, the following sub-sections introduce dc-coupled plants first (since there are minimal differences between these facilities and standalone BESS facilities) and then provide more details around considerations for ac-coupled plants. As previously mentioned, the guideline focuses primarily on hybrid plants combining inverter-based renewable generation with BESS technology. The recommended performance characteristics for hybrid plants generally refer to the overall hybrid facility since this is coordinated at the plant-level; however, some description of the individual BESS or generation components within the facility may be used when necessary.

DC-Coupled Hybrid Plants

There is no significant difference in recommended performance between dc-coupled hybrid plants and stand-alone BESS. The following performance characteristics are practically the same and are covered in **Table 1.1** and in the previous section:

- Momentary cessation
- Phase jump immunity
- Reactive current-voltage control during large disturbances
- Reactive power at no active power output
- Return to service following tripping
- Inverter current injection during fault conditions
- Balancing
- Monitoring
- Operation in low short-circuit strength systems
- Fault ride-through capability
- System restoration and black start capability

[53] http://www.ercot.com/content/wcm/lists/197392/2019_PanhandleStudy_public_V1_final.pdf

- Grid forming[54]
- Protection settings
- State of charge
- Damping support

Additionally, the following topics from **Table 1.1** warrant additional details where dc-coupled hybrids have specific considerations that need to be taken into account:

- **Reactive Capability Curve:** It is likely that total installed capacity of BESS and of other generating resources behind the common inverter will be higher than the common inverter rating. Therefore, reactive capability of dc-coupled hybrid both during active power injection and withdrawal, as well as zero active power, will be limited by the inverter rating.
- **Active Power – Frequency Controls and FFR:** For these two topics, dc-coupled performance considerations will be similar to that of ac-coupled hybrid as discussed in the next section. Overall, a dc-coupled plant's capability to provide frequency control both for under- and over-frequency events will be further limited by the common inverter rating.
- **Monitoring:** BAs, TPs, PCs, independent system operators/regional transmission organizations (ISO/RTOs) may require telemetry from each individual component within the facility (e.g., separate metering points for the BESS and the generating component) to support forecasting, situational awareness tools in the control room, and operations and planning study dispatch assumptions.
- **State of Charge:** Similar performance considerations as ac-coupled hybrids discussed in the next section.

AC-Coupled Hybrid Plants

Table 1.2 provides an overview of the considerations that should be made when describing the recommended performance of ac-coupled hybrid plants compared with other BPS-connected inverter-based generating resources. The following sub-section elaborates on these high-level considerations in more detail.

Table 1.2: High Level Considerations for AC-Coupled Hybrid Plant Performance

Category	Comparison with BPS-Connected Inverter-Based Generators
Momentary Cessation	There are no significant differences from other BPS-connected inverter-based generating resources; for BESS part of the hybrid, momentary cessation should not be used to the greatest possible extent[55] during charging and discharging operation.
Phase Jump Immunity	There is no significant difference from other BPS-connected inverter-based generating resources.

[54] The entire plant can have the capability to be grid forming, the capabilities will be limited by the inverter current limits and size of the BESS portion of the dc-hybrid.

[55] Unless there is an equipment limitation or a need for momentary cessation to maintain BPS stability. The former has to be communicated by the GO to the TP while the latter has to be validated by extensive studies.

Table 1.2: High Level Considerations for AC-Coupled Hybrid Plant Performance	
Category	**Comparison with BPS-Connected Inverter-Based Generators**
Capability Curve	The overall composite capability curve of a hybrid plant is the aggregation of the individual capability curves of the generating resources and BESS plus any other reactive devices and less any losses within the facility as measured at the plant POI. The capability curve extends into the BESS charging region to create a four-quadrant capability curve. The curve is not symmetrical for injection and withdrawal. On the injection side, the capability curve will be equal to the sum of capability curves of a generator and capability curve of BESS during discharging. On the withdrawal side, capability will be equal to BESS capability curve, when charging. Note that interconnection requirements may not allow the full use of hybrid resource capability depending on how the BESS can charge and discharge with the generating component and with the grid. See **Capability Curve** section for more information.
Active Power-Frequency Controls	There is no significant difference from other BPS-connected inverter-based generating resources and BESS. The conventional droop characteristic can be used in both generating and charging modes of the hybrid. Active power-frequency control capability may be limited by total active power injection and/or the withdrawal limit of the hybrid plant at POI that may be set lower than the sum of active power ratings of the individual resources within the hybrid plant. Due to the presence of the BESS, a hybrid plant can also have the capability of providing frequency response for under frequency conditions, subject to the SOC and set point limits outlined in FERC Order 842. See **Active Power-Frequency Controls** section for more information.
Fast Frequency Response	FFR capability will depend on the resources making up the hybrid plant. BESS are well-positioned for providing FFR to systems with high rate-of-change-of-frequency (ROCOF) due to not having any rotational components (similar to a solar PV facility). However, if BESS is combined with wind generation facility coordination between resources within, the hybrid may be needed to achieve sustained FFR. Additionally, hybrid plant FFR capability may be limited to total active power injection and/or withdrawal limit of the hybrid plant. The need for FFR is based on each specific Interconnection's need.[56] Sustained forms of FFR help arrest fast frequency excursions but also help overall frequency control. BESS are likely to be able to provide sustained FFR within their SOC constraints. Consistent with FERC Order 842, there should be no requirement for hybrid resources to reserve headroom or violate set point or SOC limits to provide frequency response though the BA can procure that service. See **Fast Frequency Response** section for more information.

[56] NERC, "Fast Frequency Response Concepts and Bulk Power System Reliability Needs," March 2020: https://www.nerc.com/comm/PC/InverterBased%20Resource%20Performance%20Task%20Force%20IRPT/Fast_Frequency_Response_Concepts_and_BPS_Reliability_Needs_White_Paper.pdf

Table 1.2: High Level Considerations for AC-Coupled Hybrid Plant Performance	
Category	**Comparison with BPS-Connected Inverter-Based Generators**
Reactive Power-Voltage Control (Small Disturbances)	There is no significant difference from other BPS-connected inverter-based generating resources. The dynamic voltage support capability of a hybrid is a combination of capability of the generating resource(s) and BESS, which are part of the hybrid. The BESS portion of the hybrid has the capability to provide dynamic voltage control during both discharging and charging operations. Note that system specific requirements may not necessitate the use of the full equipment capability of the hybrid plant. TOPs should provide a voltage schedule (i.e., a voltage set point and tolerance) to the hybrid that can apply to both operating modes (injection and withdrawal). See **Reactive Power-Voltage Control (Small Disturbances)** section for more information.
Reactive Current-Voltage Control (Large Disturbance)	There is no significant difference from other BPS-connected inverter-based generating resources. BESS portion of the hybrid can be configured to provide dynamic voltage support during large disturbances both while charging and discharging.
Reactive Power at No Active Power Output	There is no significant difference from other BPS-connected inverter-based generating resources.[57]
Inverter Current Injection during Fault Conditions	There is no significant difference from stand-alone BPS-connected inverter-based generating resources and BESS. See **Inverter Current Injection during Fault Conditions** section for more information.
Return to Service Following Tripping	There is no significant difference from other BPS-connected inverter-based generating resources. Hybrid plant should return to service following any tripping or other off-line operation by operating at the origin (no significant exchange of active or reactive power with the BPS), and then ramp back to the expected set point values, as applicable. This is a function of settings and any requirements set forth by the BA (or TO in their interconnection requirements).
Balancing	There is no significant difference from other BPS-connected inverter-based generating resources.
Monitoring	There is no significant difference from other BPS-connected inverter-based generating resources.
Operation in Low Short-Circuit Strength Systems	There is no significant difference from other BPS-connected inverter-based generating resources.
Grid Forming	The BESS portion of a hybrid plant has the unique capabilities to effectively deploy grid forming technology to help improve BPS reliability in the future of a high penetration of inverter-based resources. Newly interconnecting hybrid plants should consider using grid-forming technology to support the BPS under these future conditions. See **Grid Forming** section for more information.

[57] As the resource transitions from charging to discharging modes of operation (or vice versa) or operates at zero active power output while connected to the BPS, the BESS should have the capability and operational functionality enabled to continuously control BPS voltage.

Table 1.2: High Level Considerations for AC-Coupled Hybrid Plant Performance	
Category	**Comparison with BPS-Connected Inverter-Based Generators**
Fault Ride-Through Capability	There is no significant difference from other BPS-connected inverter-based generating resources. A hybrid plant should have the same capability to ride through fault events on the BPS, when point of measurement (POM) voltage is within the curves specified in the latest effective version of PRC-024, subject to limitations of legacy equipment. For the BESS part of the hybrid, this applies to both charging and discharging modes. Unexpected tripping of generation or load resources on the BPS will degrade system stability and adversely impact BPS reliability. Ride-through capability is a fundamental need for all BPS-connected resources such that planning studies can identify any expected risks.
System Restoration and Blackstart Capability	Hybrid plants may have the ability to form and sustain their own electrical island if they are a part of a blackstart cranking path. This may require new controls topologies or modifications to settings that enable this functionality. Blackstart conditions may cause large power and voltage swings that must be reliably controlled and withstood by all blackstart resources (i.e., operation under low short circuit grid conditions). For the hybrid to operate as a blackstart resource, assurance of energy availability is needed as well as a designed energy rating that ensures energy availability for the entire period of restoration activities. At this time, it is unlikely that most legacy hybrid plants can support system restoration activities as a stand-alone resource; however, they may be used to enable start-up of subsequent solar PV, wind, or synchronous machine plants and accommodate fluctuations in supply and demand. See **System Restoration and Blackstart Capability** section for more information.
Protection Settings	There is no significant difference from other BPS-connected inverter-based generating resources.
Power Quality	There is no significant difference from other BPS-connected inverter-based generating resources.
State of Charge *(new)*	Similarly to the standalone BESS, the SOC of a BESS portion of the hybrid may affect the ability of the hybrid to provide energy or other ERSs to the BPS at any given time.[58] These limits and how they affect BESS operation should be defined by the hybrid owner and provided to the BA, TOP, RC, TP and PC. BESS SOC will be optimized by the hybrid plant controller in coordination with other parts of the hybrid (wind or solar) based on irradiance and/or wind conditions, market prices, energy, and ESR obligations of the hybrid. In addition, the manner in which the BESS would charge is to be communicated by the GO. Here, system loading conditions and generation from other parts of the hybrid plant will play a role. For example, in a wind-BESS hybrid plant during low load high renewable scenarios, the BESS may be charged directly from the wind output. In this scenario, the hybrid plant will not appear as a load on the system. Alternatively, the plant may be directed to charge from the network in order to increase the loading on the system to satisfy stability considerations. See **State of Charge** section for more information.

[58] https://www.nrel.gov/docs/fy19osti/74426.pdf

Table 1.2: High Level Considerations for AC-Coupled Hybrid Plant Performance	
Category	**Comparison with BPS-Connected Inverter-Based Generators**
Operational Limits *(new)*	Based on economics or design considerations, the BESS portion of the hybrid may be operated to only charge from other wind and/or solar part of the hybrid or to charge from the grid as well. The hybrid owner should provide this information to the BA, TOP, RC, TP and PC. Hybrid plant owners may choose to limit injection/withdrawal at the POI to a level that is lower than actual capability of the hybrid. The hybrid owner should provide this information to the BA, TOP, RC, TP and PC. Where such limit exists, the studies as well as voltage support and frequency support requirements may apply only up to the limits. See **Operational Limits** section for more information.
Damping Support	BESS can have the capability of providing oscillation damping support, similar to synchronous gnerators, HVDC/FACTS facilities, and other BPS-connected inverter-based resources. BESS can operate in the both charging and discharging mode, which provides greater capabilities for damping support.

Topics with Minimal Differences between AC-Coupled Hybrids and standalone BESS Resources

The following performance characteristics have practically no difference between ac-coupled hybrid plants and standalone BESS:

- Momentary cessation
- Phase jump immunity
- Reactive current-voltage control during large disturbances
- Reactive power at no active power output
- Return to service following tripping
- Inverter current injection during fault conditions
- Balancing
- Monitoring
- Operation in low short-circuit strength systems
- Fault ride-through capability
- System restoration and blackstart capability
- Grid forming[59]
- Protection settings
- Damping support

Refer to the recommendations outlined in NERC *Reliability Guideline: BPS-Connected Inverter-Based Resource Performance*[60] for more details on each of the aforementioned subjects. The following sub-sections outline the additional topics from **Table 1.2** that warrant additional details and where AC-Coupled hybrids have specific considerations that need to be taken.

[59] The BESS component of an ac-coupled hybrid can have the capability to provide grid-forming capability; if the hybrid facility is dc-coupled, the entire plant can have the capability to be grid-forming.

[60] https://www.nerc.com/comm/PC_Reliability_Guidelines_DL/Inverter-Based_Resource_Performance_Guideline.pdf

Capability Curve

The overall active and reactive power capability of an ac-coupled hybrid plant is the summation of the capabilities for each of the BESS and generating components within the facility. In terms of establishing the capability curve for an ac-coupled hybrid plant, both the BESS and generating component should have their own capability curve that simulation models would represented separately. The POI the GO to the RC, TOP, BA, TP, and PC should explicitly document and provide for any contractual limits that may limit active power to a pre-determined level for inclusion in their tools and studies. Furthermore, the facility should not be unnecessarily limited from providing its full reactive power capability by any plant-level controls. In general, the overall plant-level capability of an ac-coupled hybrid plant will be asymmetrical with more active and reactive power capability when both the generating component and BESS are injecting active power to the BPS. **Figure 1.5** illustrates an example of an ac-coupled hybrid plant consisting of a solar PV generation component with a BESS component.

TOs should ensure their interconnection requirements are clear on how capability curves are provided for BESS and hybrid power plants, and TPs and PCs should ensure that their modeling requirements are also clear on how to represent steady-state capability curves in the simulation tools used to studies these resources.

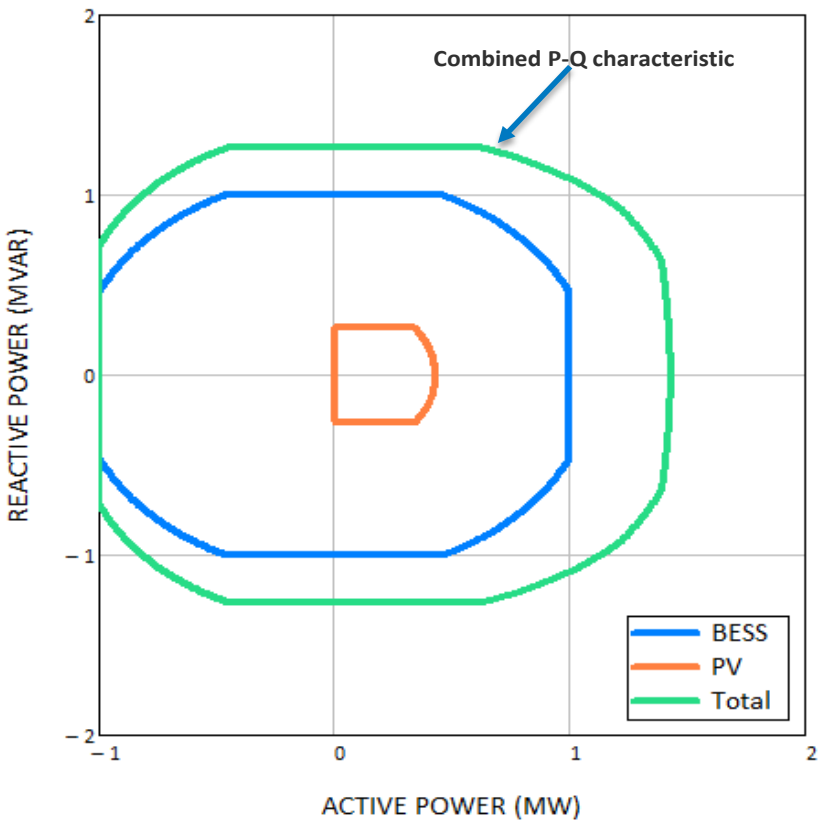

Figure 1.5: Example of AC-Coupled Solar PV + BESS Hybrid Plant Capability Curve [Source: NREL]

Active Power-Frequency Control

Active power-frequency controls can be extended to the charging region of operation for the BESS part of the hybrid as described in detail in standalone BESS section earlier. The overall active power-frequency control capability of the hybrid is equal to combined capability of all resources that are part of the hybrid plant. The overall capability may be limited by total active power injection and/or withdrawal limit of the hybrid plant that may be set lower than the sum of active power ratings of the individual resources within the hybrid plant.

Fast Frequency Response

BESS and solar PV have the capability of providing FFR to rapid changes in frequency disturbances on the BPS. Since there are no rotational elements, the controls that are programmed into the inverter drive the active power output predominantly. Wind generating resources can provide FFR through tapping into kinetic energy of rotating mass of a wind turbine.[61] Such response, however, cannot be sustained. To obtain sustained FFR from hybrid plants containing wind/solar PV generating resources along with the BESS, the FFR capability of the ac-coupled hybrid plant is equal to combined capability of all resources that are part of the hybrid plant. The resources within the hybrid can be coordinated to optimize total FFR and achieve required sustain time. The overall capability may be limited by total active power injection and/or withdrawal limit of the hybrid plant that may be set lower than actual capability of the plant.

An ac-coupled hybrid plant should have at least the following capabilities that may be utilized based on BA requirements and BPS reliability needs:

- Configurable and field-adjustable droop gains, time constants, and deadbands tuned to the requirements or criteria specified by the BA
- Real-time monitoring of BESS SOC to understand performance limitations that could impose on FFR capabilities from the hybrid
- The ability to provide sustained response, coordinated with primary frequency response as defined by the BA
- Consistent with FERC Order 842, there should be no requirement for hybrid plants to maintain a specific SOC for provision of frequency response

Reactive Power-Voltage Control (Normal Conditions and Small Disturbances)

There are no significant differences between ac-coupled hybrids and BPS-connected inverter-based resources with respect to reactive power-voltage control during normal grid conditions and small disturbances. In essence, the hybrid plant should have the capability to provide reactive power-voltage control both during power injection at the POM and power withdrawal (during BESS charging); however, it is useful to separate out the recommendations into each mode of operation:

- **Power Injection:** There are no significant differences between hybrid plants during power injection into the grid and other BPS-connected inverter-based generators with respect to reactive power-voltage control. Hybrids plant should have the ability to support BPS voltage. Voltage control needs to be coordinated between all resources within the hybrid plant to control hybrid plant's POM voltage within a reasonable range during normal and abnormal grid conditions. Refer to the recommendations from the NERC *Reliability Guideline: BPS-Connected Inverter-Based Resource Performance*.
- **Power Withdrawal:** Hybrid plants should have the capability to control POM voltage during normal operation and abnormal small disturbances on the BPS while BESS part of the hybrid is operating in charging mode. The ability for resources consuming power to support BPS voltage control adds significant reliability benefits to the BPS and may be required by TOs as part of their interconnection requirements or by BAs, TOPs, or RCs for BPS operations.

As the resource transitions from charging to discharging modes of operation (or vice versa) or operates at zero active power output while connected to the BPS, the BESS should have the capability and operational functionality enabled to continuously control BPS voltage. This should be coordinated with any requirements established by the TO or TOP. Generally, the output voltages of inverter-based renewable energy resources vary severely due to large fluctuations

[61] https://www.nerc.com/comm/PC/InverterBased%20Resource%20Performance%20Task%20Force%20IRPT/Fast_Frequency_Response_Concepts_and_BPS_Reliability_Needs_White_Paper.pdf

and rapid changes in the availability of their energy resources. Therefore, if used individually, it is difficult to control these resources' voltage; however, this issue is resolved in a hybrid power plant. Since the output voltage variation of the BESS from a fully charged to a discharged state is typically less, this variation can be easily controlled to maintain a stable output voltage. In addition, the battery is capable of balancing the power fluctuations either by absorbing the excess power from the renewable energy resources during charging or by supplying the power to satisfy the load-demand changes during discharging. As the resource transitions from charging to discharging modes of operation, or vice versa, a hybrid power plant should continuously have the ability to control BPS voltage throughout the transition

State of Charge

SOC considerations for the BESS portion of the ac-coupled hybrid plant are similar to those of a stand-alone BESS discussed earlier. The SOC of a BESS portion of the hybrid may affect the ability of the BESS to provide energy or other ERSs to the BPS at any given time.[62] The hybrid owner should define these limits and how they affect BESS operation and provide these definitions to the BA, TOP, RC, TP and PC. A BESS SOC will be optimized by the hybrid plant controller in coordination with other parts of the hybrid (wind or solar) based on irradiance and/or wind conditions, market prices, energy and ESR obligations of the hybrid.

Operational Limits

Based on economics or design considerations, the BESS portion of a hybrid plant may be operated to only charge from the generating component or to charge from the grid as well. Technical, economic, and policy considerations will dictate whether the hybrid plant charges from the grid or only from the generating component.[63] TOs and BAs should clearly define the acceptable charging behavior from the hybrid plant and ensure that sufficient monitoring capability is available to verify this performance. The hybrid owner should provide the charging characteristic and any operational limitations to the BA, TOP, RC, TP and PC.

The hybrid plant owner for various economic consideration may choose to set on injection/withdrawal at the POI that is lower than actual capability of the hybrid plant. The hybrid owner should provide this information to the BA, TOP, RC, TP and PC. Where such limit exists, the studies as well as voltage support and frequency support requirements may apply only up to the limits.

[62] https://www.nrel.gov/docs/fy19osti/74426.pdf

[63] In addition to any requirements imposed by the TO or BA regarding acceptable charging behavior, the structure of investment tax credits may also contribute to the charging characteristic. For example, currently a hybrid plant may need charge the BESS by renewable energy for more than 75% of the time for the first five years of commercial operation, and the tax credit value for the storage component is derated in proportion to the amount of grid charging between 0% and 25%.

Chapter 2: BESS and Hybrid Plant Power Flow Modeling

BPS-connected BESS and hybrid plants are modeled very similarly to other BPS-connected inverter-based resources, such as solar PV and wind power plants. This chapter provides a brief overview of the presently recommended power flow modeling practices.

BESS Power Flow Modeling

The power flow representation for a BPS-connected BESS is similar to other types of BPS-connected inverter-based resources. **Figure 2.1** shows a generic[64] power flow model for a BPS-connected BESS facility. The power flow representation of a BPS-connected BESS facility includes the following components:

- **Generator Tie Line:** Where the BESS is connected to the BPS (to the POI) through a transmission circuit (i.e., the generator tie line), this element should be explicitly modeled in the power flow to properly represent active and reactive power losses and voltage drops or rises.
- **Substation Transformer:** Any substation transformers[65] (also referred to as "main power transformers") should be explicitly modeled in the power flow base case. All relevant transformer data, such as tap ratios, load tap changer controls, and impedance values, should be modeled appropriately.
- **Collector System Equivalent:** Based on the cabling and layout of the BESS facility, some GOs may choose to model an equivalent collector system to capture any voltage drop across the collector system. However, BESS facilities are not geographically and electrically dispersed like wind and solar PV facilities, so BESS collector system equivalent impedances are likely much smaller. Therefore, this may or may not be included in the BESS power flow model.
- **Equivalent Pad-Mounted Transformer:** Each of the inverters interfacing the battery systems with the ac electrical network will include a pad-mounted transformer. An equivalent pad-mounted transformer is typically modeled, scaled to an appropriate size to match the overall MVA rating of the aggregate inverters at the BESS facility.
- **Equivalent BESS:** An equivalent BESS generating resource is modeled to represent the aggregate amount of inverter-interfaced BESS installed at the facility. The capability is scaled to match the overall capability of aggregate inverters. The equivalent BESS is modeled as a generator in the power flow, and appropriate voltage control settings (and other applicable control settings) should be specified in the model. In situations where different inverter types (i.e., make and model of inverter) are used[66] within the BESS, each different inverter type is typically separately aggregated. GOs should consult with their TP and PC for recommended modeling practices.
- **Shunt Compensation and Reactive Devices:** The plant may include shunt reactive devices to meet the reactive capability and voltage requirements defined by the TO and TOP. These may include shunt capacitors and reactors, FACTS devices, or synchronous condensers as applicable. If these devices are installed, they should be modeled appropriately. **Figure 2.1** also denotes that these installations could even be located at the POI within the boundary of the GO and GOP and should also be modeled appropriately.
- **Plant Loads:** The plant may include a small load to represent station service load as deemed necessary based on the TP and PC modeling requirements. Auxiliary loads supplied by the dc bus are generally not modeled.

[64] Different configurations may exist for BESS facilities based on considerations at each individual installation. The power flow model provided by the GO to the TP and PC should be an accurate representation of the actual installed (or expected) facility and should not use any default or generic parameters or configurations.

[65] Some BESS may have more than one substation transformer, and each should be explicitly modeled.

[66] This occurs more frequently in inverter-based generating resources, either installed in different phases or often in large facilities.

Elements in **Figure 2.1** shown in red are denoted as elements that may or may not be represented in BESS models based on each specific installation's modeling needs with the goal of capturing all the needed electrical effects. The elements described in black should be modeled in all BPS-connected BESS facilities. Common voltage levels are shown in **Figure 2.1** for illustrative purposes.

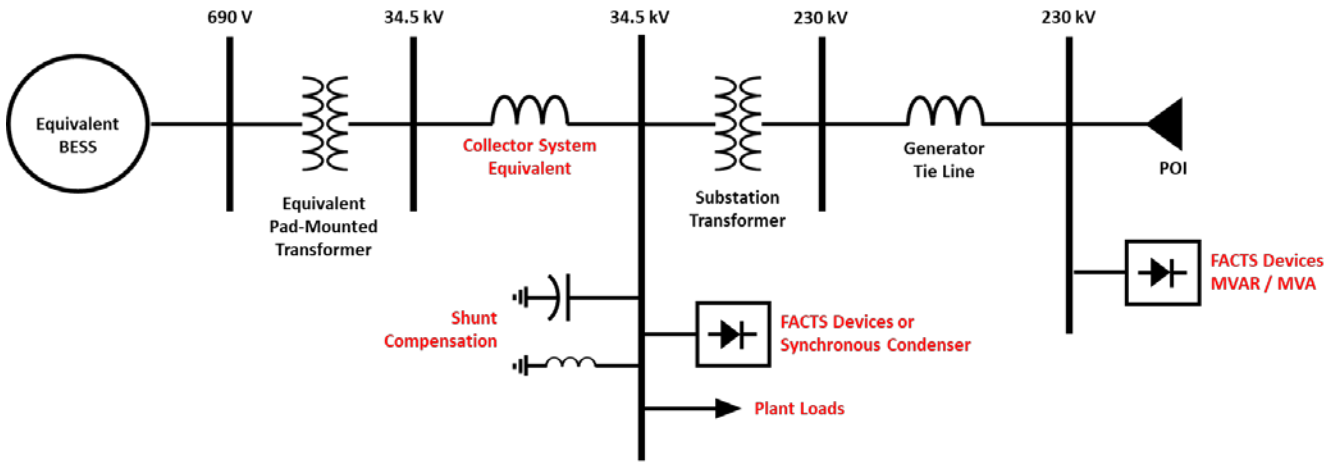

Figure 2.1: Generic Power Flow Model Example for BESS

The GO, TP, and PC will need to consider the following aspects of steady-state power flow modeling for BESS:

- **Charging Operation:** Charging capability can be modeled by setting the equivalent BESS generator with an appropriate negative value for the active power limit, P_{min}. Note that the maximum charging limit (P_{min}) may be different than the maximum discharging limit (P_{max}). These P_{min} and P_{max} limits in the equivalent BESS generator record should be set to any limits imposed by the plant and inverter controllers in coordination with the capability of the inverters. Also, the BA, TOP, RC, TP, and PC should ensure they understand how the other BESS facility components (e.g., shunt compensation) operate during charging operation such that the overall BESS model can be set up correctly in both charging and discharging modes.
- **Point of Voltage Control and Power Factor Mode:** As with other generating resources, the generating resource (i.e., the equivalent BESS) can be configured to operate either in a power factor control mode or a voltage control mode with a specific control point in the grid (i.e., the POM or POI). This should be configured appropriately in the generator record voltage controls. Newer models may enable advanced controls such as voltage droop characteristic to be represented. Generator voltage reference can be changed to meet the voltage schedule.

Hybrid Power Flow Modeling

The configuration of hybrid plants will likely vary more than BESS facilities, based on the size of the plant, the type of technologies used, and the overall layout of the facility. Regardless, each hybrid plant should be modeled according to the expected[67] or actual facilities installed in the field. Furthermore, hybrid plants may be modeled differently depending on whether they are ac-coupled or dc-coupled facilities. GOs should consult with their TP and PC to determine the appropriate modeling approach based on whether the facility is ac-coupled or dc-coupled.

AC-Coupled Hybrid Plant Power Flow Modeling

Figure 2.2 illustrates a generic model representation for an example[68] ac-coupled hybrid plant. Since the BESS and the generating resource are connected through the ac network, then each component should be represented accordingly, as shown in **Figure 2.2**. An equivalent BESS generation and equivalent pad-mounted transformer should

[67] During the interconnection study process.

[68] There are many different types of ac-coupled hybrid plant configurations; this is used as an example only.

be represented, as well as an equivalent collector system (if needed to properly represent the electrical effects). For the example shown in **Figure 2.2**, where the ac-coupling is at the low-side of the substation main power transformer, the inverter-based generating resource is coupled to the BESS at this point. The inverter-based generating resource also has its own equivalent generator model, equivalent pad-mounted transformer, and equivalent collector system modeled appropriately. The substation main power transformers and plant generator tie line are also modeled explicitly. Any shunt compensation, such as shunt reactors, capacitors, FACTS devices, or synchronous condensers, should be modeled as well. Again, elements shown in red may or may not be represented in the model based on each specific location, and elements shown in black should be modeled for all facilities. Common voltage levels are shown only for illustrative purposes.

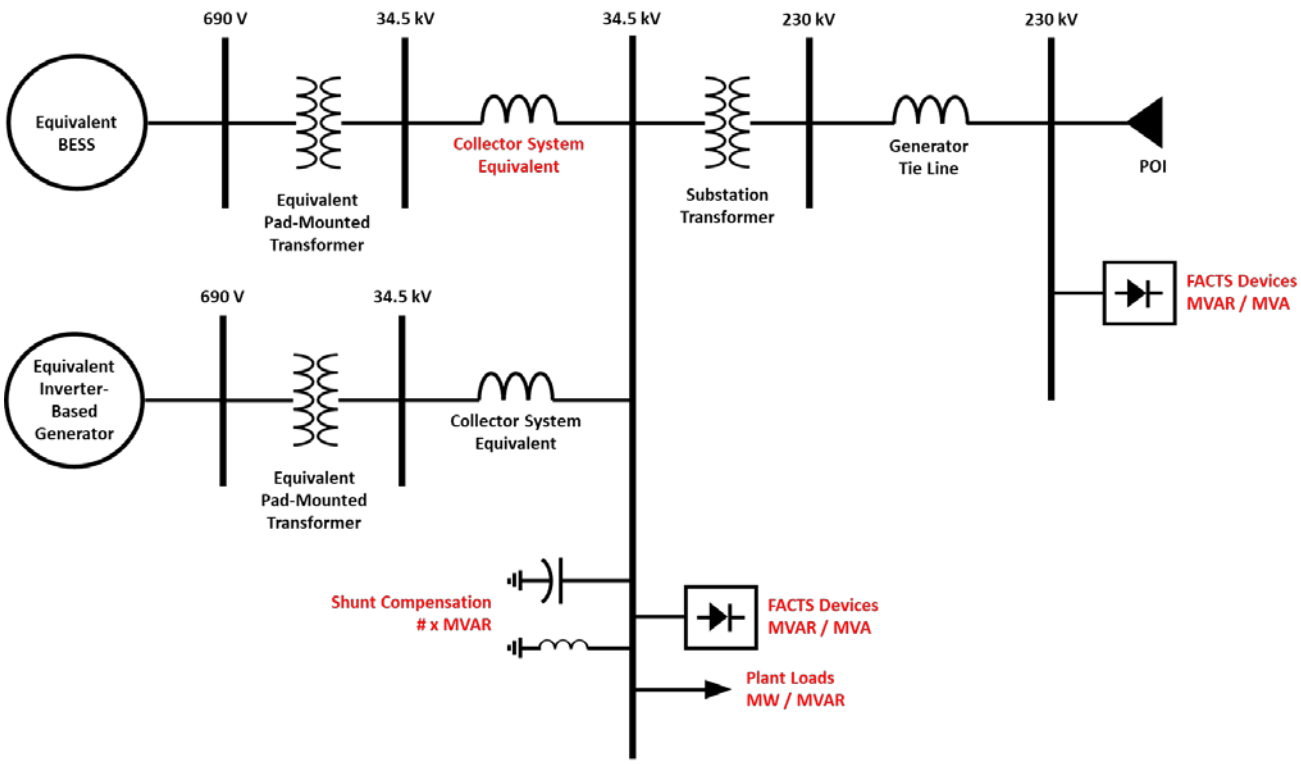

Figure 2.2: Generic Power Flow Model Example for AC-Coupled Hybrid Power Plants

The GO, TP, and PC will need to consider the following aspects of steady-state power flow modeling for ac-coupled hybrid power plants:

- **Plant Configuration:** The ac-coupled hybrid plants can have significantly different configurations on the ac-side of the inverter interface. Therefore, special attention should be given to ensuring that the power flow model accurately represents the overall configuration of the plant (which may be different from **Figure 2.2**).
- **Coordinated Operation of BESS and Generating Component:** Since the BESS is explicitly modeled, charging and discharging capability can be represented by setting the equivalent BESS generator P_{min} and P_{max} values appropriately. The P_{min} and P_{max} limits in the equivalent BESS generator record should be set to any limits imposed by the plant and inverter controllers in coordination with the capability of the inverters. BESS operation should be modeled by setting active power output, P_{gen}, accordingly. The BA, TOP, RC, TP, and PC should ensure they understand how the BESS is expected to operate in relation to the inverter-based generating component within the plant, such that the output of both resources is coordinated. This includes at least the following:
  - **Maximum Overall Plant Power Output (Plant P_{max}):** The maximum power output of the overall hybrid facility may be limited by interconnection agreement, plant controller, or other means. While the

nameplate rating of the individual BESS and generating resources may exceed the limit, the power output of the overall facility may not; therefore, it is important to understand what the maximum operational output of the plant will be. Most power flow software today does not have a way to represent this limit, but the software industry should pursue the ability to explicitly model both the BESS and the generator within an overall plant model with its own limitations. In the meantime, BAs, TOPs, RCs, TPs, PCs, and GOs should develop a standardized way of documenting and communicating such limits.

  - **BESS Charging from BPS or from Generating Resource:** Depending on the interconnection agreement, the hybrid plant may or may not be able to charge from the BPS. If allowed, the BESS may be able to charge power from the BPS with the generating unit dispatched off. If not allowed, the BESS will only charge using energy produced by the generating component of the plant. Most power flow software today does not have an automatic or effective way to represent this limit, but the software industry should pursue this capability. In the meantime, BAs, TOPs, RCs, TPs, PCs, and GOs should develop a standardized way of documenting and communicating such limits.

- **Coordinating Voltage Controls for BESS and Generating Component:** The hybrid power plant will have obligations per VAR-002-4.1 to control voltage at its POI or POM, and the power flow base case should be configured to ensure similar voltage control strategies as used in the field. In an ac-coupled hybrid plant with the BESS and generating component modeled explicitly, the voltage controls will need to be coordinated among both devices. Both equivalent generator records for the BESS and generating component can be coordinated using the reactive power sharing parameter in each unit.[69]

The WECC Renewable Energy Modeling Task Force (REMTF) has developed recommendations for software vendors to improve the capability for modeling BESS and hybrid plants,[70] particularly for representing overall plant-level active power limitations as well plant-level coordinated voltage controls in the power flow base case. This will enable more effective modeling of hybrid plant dispatch scenarios as well as overall plant voltage control.

DC-Coupled Hybrid Plant Power Flow Modeling

Figure 2.3 illustrates a generic model representation for a dc-coupled hybrid plant. For dc-coupled plants, the BESS and inverter-based generating resources are coupled on the dc-side of the inverter. Therefore, the coupling is not necessarily modeled in power flow simulation tools, and the coupled BESS and inverter-based generating resources are aggregated to a single aggregate generator model. Since the coupling occurs at each individual generating resource, there is no BESS inverter, pad-mounted transformer, or equivalent collector system represented. Only the equivalent inverter-based generating resource (including the battery), the ac-side equivalent pad-mounted transformer, and the equivalent collector system are represented. Similar to ac-coupled hybrid plants and other BPS-connected inverter-based resources, the substation main power transformer and generator tie line are modeled explicitly. Any shunt compensation, such as shunt reactors, capacitors, FACTS devices, or synchronous condensers should be modeled as well. Again, elements shown in red may or may not be represented in the model based on each specific location, and elements shown in black should be modeled for all facilities. Common voltage levels are shown only for illustrative purposes.

[69] This is similar to configuring multiple synchronous generators to control the same bus voltage.

[70] WECC White Paper on Modeling Hybrid Power Plant of Renewable Energy and Battery Energy Storage System: https://www.wecc.org/_layouts/15/WopiFrame.aspx?sourcedoc=/Administrative/WECC%20White%20Paper%20on%20modeling%20hybrid%20solar-battery.pdf

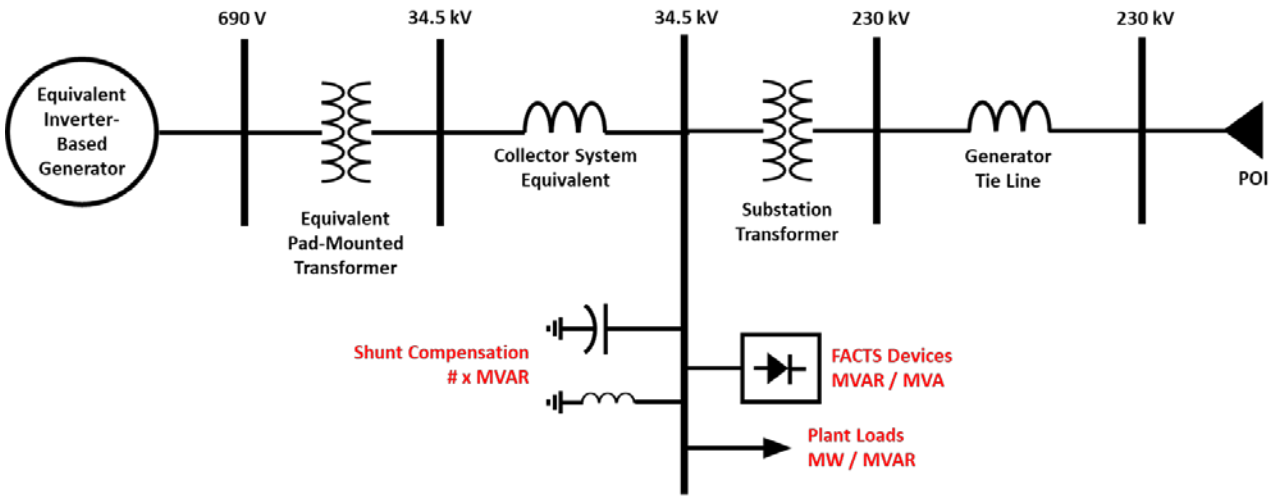

Figure 2.3: Generic Power Flow Model for DC-Coupled Hybrid Power Plants

The GO, TP, and PC will need to consider the following aspects of steady-state power flow modeling for dc-coupled hybrid power plants:

- **Charging and Discharging Operation:** If the BESS only charges from the generating component (due to interconnection requirements or if the ac/dc inverter is not bidirectional), then P_{min} will remain zero for the facility. If the BESS can charge from the grid, then P_{min} for the equivalent generator component can be set to the corresponding aggregate negative active power limit. Similarly, the maximum equivalent generator power output, P_{max}, should also be set according to equipment capabilities and plant limitations. Note that the maximum charging limit (P_{min}) may be different than the maximum discharging limit (P_{max}). The TP and PC should ensure they understand how the BESS and generating components are expected or required to operate during charging and discharging operation so that the overall model can be set up correctly.
- **Voltage Control:** The appropriate type of voltage control should be accurately modeled (as with other inverter-based resources), and all plant voltage control settings should be coordinated in the models.
- **Frequency Response:** While frequency response is modeled in the dynamic models, active power limits for the facility should be coordinated between models so the resource is configured appropriately in the steady-state and dynamic simulations appropriately. Droop gain should be configured appropriately to be consistent with per unit representation of the plant and the actual MW response from the BESS portion.

Chapter 3: BESS and Hybrid Plant Dynamics Modeling

With an appropriate power flow representation for the BESS or hybrid plant, dynamic models can be used to represent the behavior of these resources during BPS disturbances. Dynamic modeling practices for BESS and hybrid plants are similar to those of other BPS-connected inverter-based resources; however, there are some unique characteristics to capture regarding four-quadrant operation of energy storage and consideration of SOC. This chapter describes recommended practices for modeling BESS and hybrid plants including use of appropriate models, model quality considerations, and EMT models.

Use of Standardized, User-Defined, and EMT Models

As with other inverter-based resources, the dynamic models used to represent BESS and hybrid power plants will depend on TP and PC modeling requirements as well as the types of studies being conducted. GOs should refer to the specific modeling requirements for each TP and PC when providing models during the interconnection study process and should ensure that the models reflect the expected behavior of the facility seeking interconnection (or facility installed in the field). TPs and PCs should consider updating their modeling requirements to ensure clarity and consistency for modeling BESS and hybrids during interconnection studies, during annual planning assessments, and any other studies being conducted. Some considerations for different model types include the following:

- **Standardized Library Models:** These types of models may be appropriate (and required) for interconnection-wide base case development. Standardized models, however, may not fully capture all BESS and hybrid behavior and response characteristics during large disturbances. Standardized library models may not be able to represent fully nonlinearities in control, communications delays across technologies, dynamic rise times, etc. GOs should coordinate with their equipment manufacturers and any consultants developing plant-level models to ensure these models are appropriate and suitably parameterized. TPs and PCs should ensure that sufficient documentation is provided by the GO to verify that the performance will sufficiently match the dynamic model provided.
- **User-Defined Models:** These types of models are more appropriate for interconnection studies that may be testing or screening for various issues, such as ride-through performance, operation in low short-circuit conditions, local stability analysis, and other localized reliability assessments. The user-defined models may be required in conjunction with the standardized library models, and TPs and PCs may require the GO to provide benchmarking reports between the two models. A user-written dynamic model can be used to tune the response of a standardized library model to represent the actual response of the resource as closely as possible. Any discrepancies can and should be documented and explained by the equipment manufacturers.
- **EMT Models:** EMT models are the most accurate representation of the dynamic response of an inverter-based resource (including BESS and hybrid plants). TPs and PCs are encouraged to require EMT models for newly interconnecting BESS and hybrid plants since these models are the most appropriate to test and analyze for any controls instability, unbalanced fault analysis, operation in low short-circuit strength conditions, and any anomalous controls or instability performance that may be identified during screening with the aforementioned model types. EMT models that capture the “real code” of the inverters and plant-level controller installed in the field are preferred. As the grid continues to evolve, modeling practices improve, and inverter control schemes get more complex, it is likely that EMT models will be utilized more extensively.

As BESS and hybrid plants continue to interconnect to the BPS, it imperative that these resources are studied appropriately with accurate models. TPs and PCs will weigh these considerations against their modeling practices and capabilities and determine appropriate modeling requirements for existing and newly interconnecting generating resources. Generating resources should not be allowed to interconnect without first meeting all modeling requirements of the TPs and PCs.

Dynamic Model Quality Review Process

All TPs and PCs should have modeling requirements that include quality testing to ensure that the dynamic model is a reasonable representation of the equipment installed in the field, that the model meets certain specifications, and that the model performs reasonably when subjected to a set of simulation tests. Many TPs and PCs currently have these types of quality tests in place,[71] and all TPs and PCs are encouraged to strengthen their requirements, particularly in the area of BESS and hybrid plant modeling. These quality tests can be applied to standardized library models, to user-defined models, as well as to EMT models. The goal of these tests is to give the TP and PC assurance that the model being used reasonably represents the equipment in the field and meets the expected performance specifications established by the TO in their interconnection requirements. Examples of model quality tests used for inverter-based resources that should also be applied to BESS and hybrid plants include, but are not limited to, the following:

- **Low and High Voltage Ride-Through Analysis:** under various charging and discharging conditions (included at power output limits), SOC conditions, and both consuming and producing reactive power
- **Small Voltage and Frequency Disturbances:** under various charging and discharging conditions (including at power output limits), SOC conditions, and both consuming and producing reactive power
- **Short-Circuit Strength Analysis:** under varying levels of short-circuit strength with different (or stressed) local dispatch scenarios for different charging and discharging conditions (including at power output limits) and SOC conditions

BESS Dynamic Modeling

Although the implementation may be different among equipment manufacturers, the modeling structure of BPS-connected BESS is (in principle) the same as BPS-connected solar PV and Type 4 wind plants. The overall structure consists of a converter control module, an electrical control module, and a plant control module. Frequency ride-through and voltage ride-through settings are modeled with the generator protection modules. This section describes using the latest standardized library models to represent BESS (see **Figure 3.1**). The standardized library models with variation of each module provide flexibility to simulate the overall plant dynamic behavior. The modules may not directly match control blocks in the field, but they can be set up to achieve the desired performance by selecting proper modules and control flags. User-defined models may also be required as described in this chapter. If user-defined models are required by the TP and PC, specific modeling requirements should be in place that describe the level of detail, transparency, functionality, and documentation.

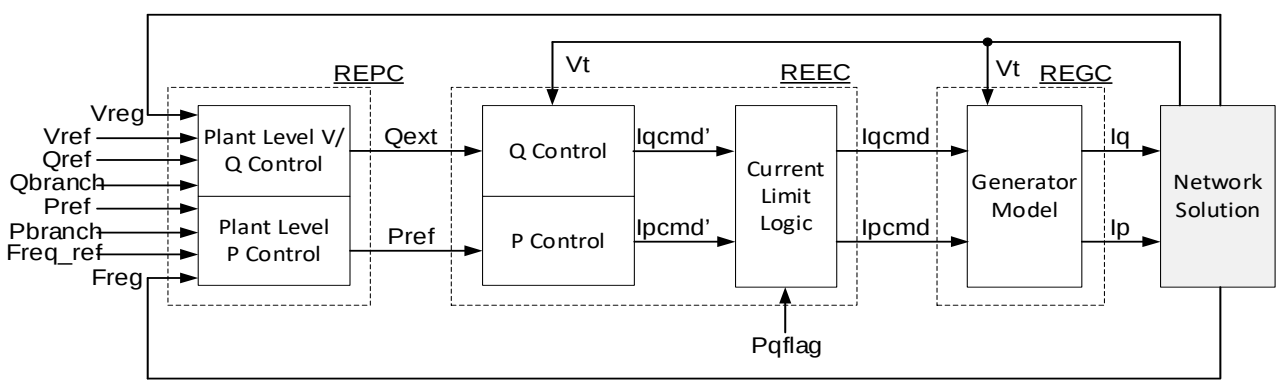

Figure 3.1: Block Diagrams of Different Modules of the WECC Generic Models[72]

[71] ERCOT Model Quality Guide: http://www.ercot.com/content/wcm/lists/168284/ERCOT_Model_Quality_Guideline.zip
[72] WECC Solar PV Plant Modeling and Validation Guideline: https://www.wecc.org/Reliability/Solar%20PV%20Plant%20Modeling%20and%20Validation%20Guidline.pdf

The different modules used in representing the dynamic behavior of a BESS include:

- **REGC (REGC_*)[73] Module:** used to represent the converter (inverter) interface with the grid. It processes the real and reactive current command and outputs of real and reactive current injection into the grid model.
- **REEC (REEC_C/REEC_D)[74] Module:** used to represent the electrical controls of the inverters. It acts on the active and reactive power reference from the REPC module, with feedback of terminal voltage and generator power output, and gives real and reactive current commands to the REGC module.
- **REPC (REPC_*) Module:** used to represent the plant controller. It processes voltage and reactive power output to emulate volt/var control at the plant level. It also processes frequency and active power output to emulate active power control. This module gives active reactive power commands to the REEC module.

Table 3.1 shows the list of BESS simulation modules used in two commonly used simulation platforms. Although implementation across simulation platforms may differ, the modules have the same functionality and parameter sets.

Table 3.1: Dynamic Models used to Represent BESS in PSLF and PSSE

Module	GE PSLF Modules	Siemens PTI Modules
Grid interface	regc_*	REGC*
Electrical controls	reec_c or reec_d	REECC1 or REECD1
Plant controller	repc_*	REPC*/PLNTBU1
Voltage/frequency protection	lhvrt/lhfrt	VRGTPA/FRQTPA

Model invocation varies across software platforms, and users should refer to the software manuals for software-specific implementations. The regulated bus and monitored branch in the repc invocation should match the control modes used in the repc model. For example, if voltage droop control is used (droop control gain kc), then the monitored branch should be specified in the model invocation.

Scaling for BESS Plant Size and Reactive Capability

Model parameters are expressed in per unit of the generator MVA base except in repc_b. The specification of MVA base is implementation-dependent.[75] To scale the dynamic model to the size of the plant, the generator MVA base parameter must be adjusted. It should be set to sum of the individual inverter MVA rating. The active and reactive range are expressed in per unit on the scaled MVA base. The MVA base for REPC_B model is always the system MVA base in GE PSLF; Siemens PTI PSS/e implementation allows a different MVA base to be specified. The per unit parameters of REPC_B model should be expressed on the MVA base used.

Reactive Power / Voltage Controls Options

The plant-level control module allows for the following reactive power control modes:

- Closed loop voltage regulation (V control) at a user-designated bus with optional line drop compensation, droop response and deadband.
- Closed loop reactive power regulation (Q control) on a user-designated branch, with optional deadband.

[73] The symbol * is used throughout this document to refer to all available variation of the module (e.g., REGC_A, REGC_B, and REGC_C).
[74] REEC_D and REPC_B model descriptions: https://www.wecc.org/Administrative/Memo_RES_Modeling_Updates_083120_Rev17_Clean.pdf
[75] For example, if MVA base is zero in reec_* or repc_*, then the MVA base entered for the regc applies to those models as well in the PSLF implementation. The user may specify a different MVA if desired. In the PSSE implementation, the MVA base is set in the power flow model.

- Constant power factor (PF) control on a user-designated branch active power and power factor. This control function is available in repc_b, not in repc_a.

In the electrical control module, other reactive control options are available as follows:

- Constant PF control based on the generator PF in the solved power flow case
- Constant reactive power based on either the equivalent generator reactive power in the solved power flow case or from the plant controller
- Closed loop voltage regulation at the generator terminal
- Proportional reactive current injection during a user-defined voltage-dip event

Various combinations of plant-level and inverter-level reactive control are possible by setting the appropriate parameters and switches. **Table 3.2** shows a list of control options and respective models and switch that would be involved. Additional variations[76] of flag settings are not shown in **Table 3.2** since they are not likely to be used for BESS operation.

Table 3.2: Reactive Power Control Options for BESS Generic Models

Functionality	Required Models	pfflag	vflag	qflag	refflag
Plant-level V control	REEC + REPC	0	N/A*	0	1
Plant-level Q control and local coordinated Q/V control	REEC + REPC	0	1	1	0
Plant-level V control and local coordinated Q/V control	REEC + REPC	0	1	1	1
Plant-level PF control and local coordinated Q/V control	REEC + REPC (repc_b and above)	0	1	1	2

* "N/A" indicates that the state of the switch does not affect the indicated control mode.

Active power control options

The plant controller models include settable flags for the user to specify active power control. **Table 3.3** shows the active power control modes, the models, and parameters involved, respectively. These types of controls include the following:

- Constant active power output based on the generator output in the solved power flow case
- Active power-frequency control with a proportional droop of different gains for over- and under-frequency conditions, based on frequency deviation at a user-designated bus

The BESS is expected to provide frequency response in both upward and downward directions. The no response and down only options are greyed out because they are unlikely to be approved by the transmission planning entity (assuming interconnection requirements are fully utilizing the bi-direction capabilities of BESS technology). In the WECC recommended modeling enhancement for hybrid power plants,[77] the base load flag in the power flow model could override the frqflag setting in the dynamic model. The frqflag/ddn/dup are meant to reflect the inverter

[76] These unlikely variations include no representation of the plant-level controller (which is not likely with new facilities) and voltage regulation options that would not meet automatic voltage regulation requirements found in NERC VAR Standards and most interconnection requirements.
[77] WECC *White Paper on Modeling Hybrid Power Plant of Renewable Energy and Battery Energy Storage System:* https://www.wecc.org/_layouts/15/WopiFrame.aspx?sourcedoc=/Administrative/WECC%20White%20Paper%20on%20modeling%20hybrid%20solar-battery.pdf

capability while base load flag represents the availability of the operational headroom. It is important to set base load flag to 0 for BESS generators regulating frequency.

Table 3.3: Active Power Control Options

Functionality	BaseLoad flag*	frqflag	ddn	dup
No frequency response	2	0	0	0
Frequency response, down only regulation	1	1	> 0	> 0
Frequency response, up and down	0	1	> 0	> 0

*BaseLoad flag is set in the power flow model.

Current Limit Logic

The electrical control module first determines the active and reactive current commands independently according to the active power control option and reactive power control option. Each command is subject to the respective current limit, 0 to *Ipmax* for active current and *Iqmin* to *Iqmax* for reactive current; then the total current of $\sqrt{Ipcmd^2 + Iqcmd^2}$ is limited by *Imax*. In situations where current limit *Imax* of the equivalent inverter is reached, the user should specify whether active or reactive current takes precedence, by setting the *pqflag* parameter in the REEC module.

State of Charge

The REEC_C module includes simulation of BESS's SOC (see **Table 3.2**). An initial condition SOCini is specified. Then Pgen is integrated during the simulation and added to SOCini. When SOC reaches SOCmax (i.e., fully charged), charging is disabled by adjusting ipmin from a negative value to 0. Similarly, when SOC reaches SOCmin (i.e., depleted of energy), discharging is disabled by adjusting ipmax from a positive value to 0. This requires the user sets SOCini based on the dispatching condition being analyzed. It has been a common source of error that the BESS is in the charging mode with SOCini = 1 and the Pgen is forced to 0 in the simulation. Given the timeframe of transient stability simulation, change of SOC throughout the simulation is negligible. For this reason, the SOC is removed from the REEC_D module.

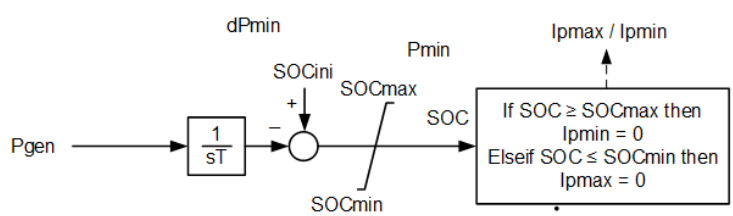

Figure 3.2: Block Diagram of the Charging/Discharging Mechanism of the BESS

Representation of Voltage and Frequency Protection

Frequency and voltage ride-through are needed for transmission-connected solar PV plants. Because they are simplified, the generic models may not be suitable to assess compliance with the voltage and frequency ride-through requirement fully. Voltage ride-through is engineered as part of the plant design and needs far more sophisticated modeling detail than is possible to capture in a positive-sequence simulation environment. It is best to use a standardized (existing) protection model with voltage and frequency thresholds and time delays to show the minimum disturbance tolerance requirement that applies to the plant. Also, the frequency calculations in a positive-sequence simulation tool are not accurate during or immediately following a fault nearby. It is best to use the

frequency protection relay model in a monitor-only mode and always have some time delay (e.g., at least 50 ms) associated with any under- and over-frequency trip settings.[78]

Hybrid Plant Dynamics Modeling

The dynamic modeling approach to hybrid power plants also depends on whether they are ac-coupled or dc-coupled. The modeling practices for the BESS component for ac-coupled hybrid resources generally follow the same principles discussed in the **BESS Dynamic Modeling** section. This section provides additional considerations unique to the hybrid power plants, both ac-coupled and dc-coupled.

As with stand-alone BESS modeling, model invocation is based on the specific simulation tool being used. In general, the plant-level controller model for ac-coupled hybrid resources will require careful consideration. In general, this model needs to be invoked from one of the on-line generators in the plant, and the regulated bus and monitored branch must be specified for REPC_* model.

AC-Coupled Hybrid Modeling

For an ac-coupled hybrid plant, each type of the resources is modeled explicitly by a set of equivalent generator(s), equivalent pad-mounted transformer(s) and equivalent collector system(s) in the power flow. Each generator has its set of REGC and REEC models. It is recommended that REPC_B be used as the master plant controller to coordinate electrical controls among all generators and apply plant level active and reactive power limits. It is also recommended that REEC_D be used for the non-BESS inverter-based generators for the reason discussed later in active power control. Refer to **Table 3.4** for implementations in two different software platforms.

Table 3.4: Models for AC-Coupled Hybrid Plants (in PSLF and PSSE)

Functionality	GE PSLF Module	Siemens PTI Module
BESS Grid Interface	regc_*	REGC*
BESS Electrical Controller	reec_c or reec_d	REECC1 or REECD1
Plant-Level Controller	repc_b[79]	PLNTBU1
Auxiliary Controller		REAX4BU1 or REAX3BU1
Voltage/Frequency Protection	lhvrt/lhfrt	VRGTPA/FRQTPA
Non-BESS Generation Component of Hybrid Facility	Use appropriate modules for the generation type (i.e., applicable models for wind, solar, synchronous generation, etc.)	

Reactive Power Control

Each individual generation type in the hybrid power plant has its qmax and qmin specified in the REEC module. The qmax and qmin values in REPC_B represents the reactive capability limits at the plant level. Depending on specific interconnection requirements, the plant level limit could be contractual instead of physical. The qmax and qmin values should reflect how the plant operates. The qmax and qmin values in REPC_B are provided on the system MVA base instead of the generator MVA base. Similar practices need to be carefully applied when using other software platforms

The reactive power capability requirement is generally specified at the high side of the substation transformer(s). For a hybrid power plant, an individual generation type may not have the capability to meet the requirement. Instead,

[78] https://www.wecc.org/Reliability/WECC_White_Paper_Frequency_062618_Clean_Final.pdf
[79] The repc_b module in PSLF is equivalent to the combined PLNTBU1 and REAX4BU1/REAX3BU1 in PSS®E.

different generation types supplement each other to provide required var capability. Depending on the dispatch condition, one type may have little reactive capability available and the other has full capability. The weighting factors of voltage/var control (parameter kwi), need to be tuned for different operating conditions.

Active Power Control

Most of the hybrid power plant has a contractual plant-level Pmax less than the sum of the individual generator Pmax. Pmax and Pmin in the REPC_B module represents the contractual plant level active power limits. Pmax and Pmin in REPC_B are provided on the system MVA base instead of the generator MVA base. Similar practices need to be carefully applied when using other software platforms

The frequency response is only modeled in REPC_B for the entire plant and pref is distributed among generators by the weighting factors kzi. Kzi may need to be tuned for different operation conditions. But more often, the hybrid plant relies on BESS for upward frequency response. REEC_D module should be used in conjunction with REPC_B to block or enable frequency response at the generator level. See an example in **Table 3.5**. The generator type that does not have headroom for upward frequency response has base load flag set to 1. REEC_D module will set Pmax to initial Pgen during the initialization, thus, the blocking upward frequency response. The BESS has base load flag set to 0 and will respond to the active power command from REPC_B.

Table 3.5: Active Power-Frequency Control Settings for Hybrid Configurations

Component	BaseLoad Flag	Module
Solar PV - Frequency response, down only regulation	1	reec_d
BESS - Frequency response, up and down	0	reec_c or reec_d
Plant controller	N/A*	Repc_b with Frqflag=1, dup > 0, ddn > 0

* The baseload flag in the power flow is associated with each individual component. There is no baseload flag for the plant.

DC-Coupled Hybrid Modeling

For a dc-coupled hybrid plant, one equivalent generator represents the inverters for multiple dc-side sources, typically solar PV and battery storage. One set of REGC, REEC, and REPC models is needed for the equivalent generator. The electrical control module suitable for the battery storage (REEC_C or REEC_D) could always be used for this type of inverters. In case the battery does not charge from the grid, the user may choose to use the electrical control module suitable for the other dc side energy source, e.g. REEC_A module. Refer to **Table 3.6** for implementations in two different software platforms.

Table 3.6: Models for DC-Coupled Hybrid in PSLF and PSS®E

Component		PSLF Module	PSS®E Modules
Grid Interface		regc_*	REGC*
Electrical Controls	May Charge from Grid	reec_c or reec_d	REECC1 or REECD1
	DC-Side Charging Only	reec_a or reec_d	REECA1 or REECD1
Plant Controller		repc_*	REPC*/PLNTBU1
Voltage/Frequency Protection		lhvrt/lhfrt	VRGTPA/FRQTPA

The modeling considerations for dc-coupled hybrid plant are the same as those discussed in the **BESS Dynamic Modeling** section above.

Electromagnetic Transient Modeling for BESS and Hybrid Plants

Recommendations pertaining to EMT modeling of BESS and hybrid power plants are very similar to those outlined in other NERC reliability guidelines.[80] All TPs and PCs should establish EMT modeling requirements for all newly interconnecting BESS and hybrid plants. GOs should coordinate with equipment manufacturers and any other entities (e.g., consultants developing the models) to ensure the model represents the expected topologies, controls, and settings of the plant seeking interconnections and to ensure that the models are updated after commissioning to represent the as-built settings of the facility. TPs and PCs should collect sufficient data and supplementary information from the GO to ensure that the as-built settings match the model.

It is important that the fundamental-frequency, positive-sequence dynamic models are a reasonable representation of the facility as well, and the EMT models can help serve as a useful verification of those models. Benchmarking becomes increasingly important, as plant-level controls get more complex across multiple manufacturers and different technologies. TPs and PCs should ensure that equipment manufacturers and GOs provide documentation to GOs to explain how the plant controller works and how the model(s) map to those controls.

[80] https://www.nerc.com/comm/PC_Reliability_Guidelines_DL/Reliability_Guideline_IBR_Interconnection_Requirements_Improvements.pdf

Chapter 4: BESS and Hybrid Plant Short Circuit Modeling

BESS and hybrid plants should be modeled in short-circuit programs during the interconnection process and during ongoing planning, design, and protection setting activities. TPs, PCs, TOs, and other entities should develop or enhance modeling practices for BESS and hybrid plants as new capabilities and features for existing tools become available. At a high-level, the recommendations for modeling BESS and hybrid plants are nearly identical to other full-converter, inverter-based generating resources (i.e., Type 4 wind, solar PV, voltage source converter HVDC, and other FACTS devices).[81] The modeling practices described in this chapter should help industry develop standardized approaches for modeling BESS and hybrid plants (similar to other inverter-based resources) that capture the key performance characteristics and other nuances[82] involved with modeling each specific facility appropriately as well as represent equipment ratings.

BESS Short Circuit Modeling

The IEEE Power System Relaying and Control Committee Working Group C24 led the development of state-of-the-art inverter-based resource short-circuit modeling practices and recently published *Technical Report #78: Modification of Commercial Fault Calculation Programs for Wind Turbine Generators*.[83] This report advised industry on necessary modifications to commercial short-circuit programs to allow accurate modeling of wind turbine generators and wind power plants. While the report does not specifically discuss modeling solar PV, BESS, or other inverter-based resources, the recommendations for modeling Type 4, full-converter wind resources also apply to solar PV and BESS facilities. Presently, the software vendors for commercial short-circuit programs have incorporated the new modeling approach of representing voltage-dependent current sources into their respective programs.[84] TOs, TPs, and PCs should coordinate to ensure that modeling requirements are reflective of these new capabilities and that well-defined specifications are in place to collect all necessary short-circuit modeling information from the GO. GOs can work with their inverter manufacturer to gather the necessary information to meet the modeling requirements.

In general, inverters are voltage-dependent current sources, meaning the amount of active and reactive current injected by the inverter during a fault is dependent on its terminal voltage. Inverter control logic dictates the voltage dependency (i.e., K-factor or closed-loop response) and is typically non-linear. As with wind and solar PV resources, the fault current from a BESS also depends on the pre-fault current. Particularly for BESS, it also depends on whether the BESS is charging or discharging prior to the fault. BESS fault current is relatively independent of BESS SOC since the SOC does not modify any control loops or affect inverter overload current capability.[85]

The IEEE Power System Relaying and Control Committee Working Group C24 report recommends that fault current injection information be provided for inverter-based resources in a tabular form (see **Table 4 1** as an example). These tables should be provided for different fault types as specified by the TO, TP, and PC. Furthermore, inverter controls may take time to reach a steady-state fault current levels so the report recommends that fault current data be provided for various time instants after fault initiation (e.g., 1, 3, and 5 cycles). If the resource provides unbalanced fault currents for unbalanced faults, then additional tables will be needed for the negative sequence current contribution. Particularly for BESS, a different set of tables should be provided for BESS in charging and discharging operation. Most TPs and PCs prefer data provided in sequence domain (positive, negative, and zero) rather than in phase domain. Again, TOs, TPs, and PCs should ensure their modeling requirements are clear regarding the type of

[81] See Chapter 3 of NERC *Reliability Guideline: Improvements to Interconnection Requirements for BPS-Connected Inverter-Based Resources*: https://www.nerc.com/comm/PC_Reliability_Guidelines_DL/Reliability_Guideline_IBR_Interconnection_Requirements_Improvements.pdf
[82] Such as capturing different control algorithms and any additional short-circuit current from BESS due to additional energy on the dc bus.
[83] IEEE PES Technical Report TR78: Modification of Commercial Fault Calculation Programs for Wind Turbine Generators: https://resourcecenter.ieee-pes.org/technical-publications/technical-reports/PES_TP_TR78_PSRC_FAULT_062320.html
[84] See "Siemens Technical Bulletin - Inverter-Based Generator Models with Controlled Power and Current – 2019 PSS CAPE User Group Meeting" and "ASPEN Technical Bulletin – Modeling Type-4 Wind Plants and Solar Plants" for more details.
[85] BESS SOC is closely managed and not expected to be operated near the edge of its charge or discharge limit during normal operation.

information (and format) needed, and GOs should coordinate with their inverter manufacturer to provide the necessary modeling information.

Table 4.1 shows an example (and should only be taken as an example) of the steady-state fault current contribution of a BESS to a symmetrical three-phase fault and assumes that the BESS only provides positive sequence current. In this example, if a three-phase fault were to cause the inverter terminal positive sequence voltage to drop to 50%, the inverter will inject 120% of rated current at a power factor angle of -45 degrees. A negative power factor angle (i.e., current lags voltage) means that the reactive current is injected into the network. Assuming that the inverter is not designed to inject unbalanced current during unbalanced faults, the inverter would inject the same current if a L-L fault on the network results in an inverter terminal positive sequence voltage of 50%. However, if the inverter can inject an unbalanced current, then a similar table representing negative sequence quantities should be provided by the GO. TOs, TPs, and PCs should ensure that their interconnection requirements clearly state how this short-circuit behavior (and short-circuit models) is required to be provided during the interconnection process.

Table 4.1: Example Positive Sequence Fault Current from BESS

V1* (pu)	I1* (pu)			Angle between V1 and I1 (deg)
	Active	Reactive	Total	
0.9	1.00	0.17	1.01	-9.7
0.8	1.00	0.34	1.06	-18.8
0.7	1.00	0.51	1.12	-27.0
0.6	0.80	0.68	1.20	-34.5
0.5	0.85	0.85	1.20	-45.0
0.4	0.63	1.02	1.20	-58.3
0.3	0.15	1.19	1.20	-82.9
0.2	0.0	1.20	1.20	-90.0
0.1	0.0	1.20	1.20	-90.0

* V1 = positive sequence voltage; I1 = positive sequence current

Hybrid Plant Short Circuit Modeling

As with the steady-state and dynamics modeling recommendations described in **Chapter 2** and **Chapter 3**, respectively, short-circuit modeling recommendations depend on whether the plant is ac-coupled or dc-coupled:

- **DC-Coupled Hybrid Plant:** As noted earlier, the fault current contribution is dictated by the inverter that couples the ac side with multiple resources on the dc side. The fault behavior of an inverter does not change if there are multiple energy sources behind it. For the purpose of short-circuit modeling, inverter modeling practices are the same as noted above (i.e., dc-coupled plants are modeled like other inverter-based resources).
- **AC-Coupled Hybrid Plant:** An ac-coupled hybrid power plant couples each form of generation or storage at a common collection bus on the ac side. The ac-coupled plants should have the generating component and the BESS component modeled separately. The inverters used may be from different manufacturers, from different models, and have different control philosophies that need to each be represented appropriately.

Chapter 5: Studies for BESS and Hybrid Plants

As BESS and hybrid plants become more prevalent, it will become increasingly important to accurately reflect these resources in simulations of BPS reliability, including studies during the interconnection process as well as operational planning and annual planning assessments. When considering study assumptions, the primary difference between BESS (including hybrid plants with BESS) revolves around the assumptions regarding charging and discharging operating points under various system conditions when compared to other resources. This chapter describes considerations to be accounted for in these studies that model the various dispatches and study the reliability impacts of these resources.

Interconnection Studies

Interconnection studies for new or modified BESS and hybrid plants include the same types of studies performed for any other IBR, including steady-state, short circuit, and stability analyses. These studies should be designed to consider all reasonable charging and discharging scenarios the plant may be expected to experience and that may be expected to stress the system and the plant under study. Given that a BESS or the battery component of a hybrid resource are controllable and generally responsive to system conditions, study assumptions should be appropriate for all possible operating scenarios (e.g., when the BESS or battery component of a hybrid plant are charging and discharging). In addition, the most-stressed assumptions should be modeled to assess reliability while keeping in mind that there can be different most-stressed scenarios for different hours of a year and for different local networks. Consideration should be given to the characteristics of the system where the plant is interconnecting, including other resource types in the area.

Interconnection studies should incorporate appropriate steady-state and dynamic ratings of all equipment, any material modifications to battery management system (BMS) firmware or site controls, and identify the most-limiting elements that establish any system operating limits. Interconnecting entities should apply dynamic limits of equipment as appropriate to support all services available from the BESS or hybrid plant. No administrative limits should be applied. Entities should avoid establishing static limits that will limit BESS and hybrid plants from providing dynamic services for the BPS. Short-circuit studies will also be needed in order to ensure appropriate breaker duty ratings, protective relay settings, and sufficient and appropriate fault currents. EMT studies may also be needed based on specific system conditions at the POI (e.g., control interactions or control instability in low short circuit strength areas). All reliability studies should use models that have been validated and rigorously verified by the TP and PC to be appropriate for the type of study being conducted.

Table 5.1 provides a list of example scenarios possibly studied during the interconnection process and considerations for each. This list is not exhaustive nor is it necessary for every interconnection study. TPs and PCs should consider the full extent of possible BESS and hybrid plant modes of operation based on the local interconnection requirements or market rules and perform reliability studies to ensure reliable operation of the BPS under all expected operating conditions. For example, hybrid plants may or may not be allowed to charge from the BPS depending on local requirements. TPs and PCs will need to make these considerations as they develop their study approaches. In general, BESS and hybrid plants will follow directives from the BA and RC based on system reliability needs and market incentives where applicable, and TPs and PCs can use this assumption when determining appropriate charge and discharge assumptions. For example, in a market environment, the battery will typically discharge during periods of high power prices and charge during times of low power prices. Generally, the price of power will be higher during peak demand and lower during low demand or high renewable output conditions.[86] **Table 5.1** was constructed with these assumptions in mind with exceptions noted.

[86] However, these assumptions may change over time as more BESS and hybrid plants connect to the BPS, changing the overall system's operational characteristics.

Table 5.1: Potential BESS and Hybrid Plant Study Dispatch Scenarios

System Conditions	Plant Type	Plant Dispatch	Considerations
Peak net demand	BESS	Fully discharging	This is a feasible scenario.
		Fully charging	Depending on market mechanisms and system rules, this scenario may not be feasible. However, there may be situations where this is a feasible scenario. For example, in a system that has a lot of wind generation, a BESS may be charging to prepare for a time later in the day when the wind is expected to die down if there is high wind output at peak load. Another feasible scenario would be when a BESS is charging right before peak load, when the system is "near" peak.
	Hybrid	Maximum plant output	This is a feasible scenario. This scenario could be achieved by a combination of maximum renewable generation output and/or maximum battery output to achieve the maximum facility rating as limited by the power plant controller.
		Maximum renewable generation output with battery fully charging	This may be a feasible scenario. Though it is unlikely to stress the system, this scenario could stress the plant and may need to be studied in transient simulations.
		No or low renewable generation output with battery fully discharging	This is a feasible scenario. The BESS component injects power at its maximum capability with some or no contributions from the generating component.
		No or low renewable generation output with battery fully charging from the grid	Similar to BESS fully charging scenario as described above. Depending on interconnection requirements and market rules, this scenario may not be feasible. However, there may be situations where this is a feasible scenario depending on localized transmission constraints.
Off-peak (low) net demand	BESS	Fully discharging	This is an unlikely scenario, but it is possible an area could have a high price due to nearby constraints, so it could need to be studied.
		Fully charging	This is a feasible scenario.
	Hybrid	Maximum plant output	This is a feasible scenario. This scenario could be achieved by maximum renewable generation output that is sustained for a period long enough that the battery is no longer able to charge.
		Maximum renewable generation output with maximum battery charging	This may be a feasible scenario. Though it is unlikely to stress the system, this scenario could stress the plant and may need to be studied in transient simulations.
		No or low renewable generation output with battery fully discharging	This is unlikely to be feasible, but it may be a feasible scenario for ac-coupled hybrids in some situations depending on localized transmission constraints.

Table 5.1: Potential BESS and Hybrid Plant Study Dispatch Scenarios			
System Conditions	**Plant Type**	**Plant Dispatch**	**Considerations**
		No or low renewable generation output with battery fully charging from the grid	This may be a feasible scenario depending on interconnection requirements, market rules, and plant design. Solar investment tax credit rules may incent hybrids to not charge from the grid during the first five years of operation, but it may be feasible starting in year six.
High system-wide renewable generation output	BESS	Fully discharging	This is an unlikely yet possible scenario.
		Fully charging	This is a feasible scenario.
	Hybrid	Maximum plant output	This is a feasible scenario.
		Maximum renewable generation output with maximum battery charging	This may be a feasible scenario. Though it is unlikely to stress the system, this scenario could stress the plant and may need to be studied in transient simulations.
Changes in dispatch	BESS	Variable	BESS transitions between charging and discharging should be tested in both steady-state and dynamic simulations. TPs and PCs should test that the model matches required ramping requirements (as applicable) and ensure that change in power dispatch do not adversely affect BPS reliability (e.g., power quality, flicker, voltage deviations, successive operation[87] of voltage control devices).

BESS can operate in different operating modes that may change over time. Examples include active power-frequency control, peak shaving, and energy arbitrage. TPs should consider the impact of each operating mode on BPS performance.

Hybrid Additions: Needed Studies

When a BESS component is added to an existing generating facility or BMS firmware of an existing BESS is changed or updated, additional interconnection studies may be required per the latest version of the NERC FAC-002 Reliability Standard as this would constitute a material modification of the existing facility. Studies of material modifications are crucial for ensuring that changes to facility ratings, performance, or behavior do not adversely affect BPS reliability. The types of studies and the level of detail of those studies should be determined by the TP and PC as part of the study process. This is particularly dependent on how the addition of the BESS affects the existing facility; see example scenarios as follows:

- If the BESS connects through the same existing ac/dc inverter as the generating component (i.e., dc-coupled), and no modifications to the ac/dc inverter occur
- If the BESS connects through the same existing ac/dc inverter as the generating component (i.e., dc-coupled), and modifications to the ac/dc inverter occur or a new ac/dc inverter is used
- If the BESS connects through its own ac/dc inverter (i.e., ac-coupled)

[87] Some voltage control devices, such as transformer load tap changers or fixed capacitors, are limited in the number of operations that are allowed in a given timeframe.

A key aspect to consider, particularly with the second and third scenarios in this list, is whether the modifications to the facility and its new operational characteristics allow the BESS to charge from the BPS or only from the generating component (a key factor for existing unidirectional inverter technology). The operational capabilities and requirements in place should drive the specific types of studies the TP and PC will perform. Again, any modifications to the facility that result in its electrical behavior, operational characteristics, or performance to change should be studied through the material modification process of the latest version of the FAC-002 standard. Table 5.2 provides some guidance on the studies that should be performed for these situations.

Table 5.2: Interconnection Study Needs for Battery Storage Addition at Existing Plant

Process/ Study	AC-Coupled or DC-Coupled with New/Modified Inverter	DC-Coupled with Existing Inverter and Grid Charging	DC-Coupled without Grid Charging (no inverter changes)
Registration with and Notification to the TP/PC	Needed	Needed	Needed
Steady-State Power Flow Study	Needed if the maximum plant active power injection or withdrawal capability changes or if the operational characteristics change; not needed otherwise	Needed to study charging mode	May be needed to study different operating conditions
Short-Circuit Study	Needed	Not needed	Not needed
Stability Study[88]	Needed	Needed to study charging mode	May be needed to study different operating conditions

In all cases in Table 5.2 regarding the modification of an existing facility to convert it to a hybrid facility, the GO should coordinate with their TP and PC to ensure that any necessary modeling, study, and performance requirements are met with the changes being made. TPs and PCs should ensure that their interconnection process and requirements clearly describe how studies are performed using accurate models of the expected facility modifications.

Transmission Planning Assessment Studies

Traditionally, system-assessment steady-state and stability studies tend to focus on peak-load and off-peak study conditions. However, with the growth of variable energy resources combined with an increase in BESS and hybrid resources, operational planning and long-term planning studies need to evolve to analyze more scenarios as there may be critical and stressed conditions outside of those traditionally studied. TPs and PCs should develop a set of study conditions that reasonably stress the system for their region. TPs and PCs may begin relying on the operational flexibilities of BESS and hybrid plants in the future and will need to consider the operational limitations and energy ratings of the BESS and hybrid plants. Planners will need to consider the impact of BESS SOC and the duration of charge available to ensure that the operational solution can remain in place until other automatic or operator actions take place. This is particularly important when performing steady-state contingency analysis, where TPs and PCs will

[88] This includes review of system and plant stability as well as other types of performance tests such as voltage, frequency, and phase jump ride-through performance.

need to closely consider the duration of the outage and the energy available from BESS and hybrid plants to support the BPS post-contingency.[89] Refer back to **Table 5.1** as a reference for study scenarios to begin these conversations.

A good approach to determine when the BESS or hybrid plant is expected to charge versus discharge is to employ production cost simulation techniques. The results from production cost simulations can provide useful information regarding the operational characteristics of the BESS or hybrid plant. The most stressed system conditions can then be determined by using engineering judgement for future-year cases. Similar tools could also be used for the power flow and dynamics analyses to avoid guessing at the most stressed conditions. One challenge with using production cost approaches is determining the exact location and operational characteristics of future BESS and hybrid plants in future year cases where system operational characteristics may be different than past experience. This poses a challenge for grid planners in developing corrective action plans and planning a future system that has sufficient operational flexibility.

Even when charging from the grid, a BESS or a hybrid plant is not considered to be load. Curtailment of charging should not be considered non-consequential load loss if such curtailment is needed to meet performance requirements of Table 1 of TPL-001-4/TPL-001-5.

Blackstart Study Considerations

In the near-term, it is not likely that BESS will be sized with sufficient energy to meet blackstart requirements (in terms of sustained power output); however, it is likely that BESS and hybrid plants may be able to help support system restoration. This will require that the BESS or hybrid plant can operate in "island mode" or stand-alone operation and be able to transition to BPS-connected automatically. It also requires that the resource operate in "grid forming" mode where it can develop its own local voltage (without any or minimal support form synchronous machines), energize BPS elements, and connect to other local loads and generators. TPs and PCs performing blackstart studies should ensure proper transitions to and from operation in islanding mode. Considerations for these studies include the following:

- **Transitioning to and from Islanding Mode:** The objective is to ensure stable transition of BESS operation between grid-connected mode and islanding mode. An example of such study is to consider the loss of the last synchronous machine in the network that results in the BESS or hybrid plant (possibly along with other IBRs) being the only sources of energy to serve load. Following the transition, and for any subsequent events within the island (example a fault or load change), the BESS or hybrid plant (and other IBR) controls should be able to bring voltage and frequency back close to their nominal values while meeting existing reliability and system security metrics. The same stable transition should be delivered when returning to a grid connected mode.
- **Operating in Islanding Mode:** The objective is to ensure that the BESS or hybrid plant can properly control local voltage and frequency when connected to local load with no, or minimal, other synchronous machines or other generators. Simulation tests to be performed may include load step up/down, ringdown, voltage ride-through, and frequency ride-through tests.
- **Blackstart:** If the BESS or hybrid plant meets the TO, TP, and PC requirements for blackstart, then the objective is to ensure the blackstart capability can be met whether the BESS or hybrid plant is the sole resource or is deployed as part of the blackstart cranking path. A typical example of a blackstart study can be conducted as follows: energize main power transformer from project side, connect the project to the local BPS network and serve localized load, and then apply a bus fault at the POI to demonstrate that the resource can stably and reliably serve that local load during the system restoration process.

[89] This may become more complex as increasing numbers of BESS and hybrid plants connect to the BPS and are modeled in power flow studies.

CAISO BESS and Hybrid Study Approach Example

This section provides a brief description of the CAISO approach for studying BESS and hybrid plants.

CAISO Generation Interconnection Study

Most of the active CAISO interconnection requests are hybrid plants. All hybrid plant requests are studied at the hybrid plant full output level with the BESS at discharging mode. If the interconnection customer elects to charge from the grid, the hybrid request is studied in the charging assessment as well. The maximum charging power is specified in the interconnection request. The two studies that are performed include the following:

- **Discharging Assessment:** This assessment includes gross peak and off-peak daytime scenarios with dispatch shown in Table 5.3. For hybrid power plant requests, the total hybrid plant active power is enforced.
- **Charging Assessment:** This assessment includes gross peak or shoulder peak and off-peak nighttime scenarios. In shoulder peak and off-peak nighttime scenarios, solar power output is zero. For most of the hybrid requests, this means on-site generation is not available to charge the energy storage and create the most stressed condition for the transmission grid.

Table 5.3 shows the different assumptions that are used for the studies conducted. The purpose of the reliability assessment is to define the boundaries of operation. Mitigation of a potential problem is usually through generation re-dispatch (congestion management) or RAS actions. Careful consideration should be made during the interconnection process regarding facilities with planned RASs. As the number of RASs increase on the BPS, the need for a comprehensive system review should be considered.

Table 5.3: CAISO Reliability Assessment Dispatch Assumptions

Condition	Peak	Peak Charging	Shoulder Peak Charging	Off-Peak Daytime	Off-Peak Nighttime Charging
Load Level[90]	1-in-10 years	1-in-10 years	75% of peak	50% ~ 65% of peak	40% of peak
Solar Generation	Pmax	Pmax	0	85% of Pmax	0
Wind Generation	Pmax	50–65% of Pmax	50% of Pmax	Pmax	Pmax
Energy Storage Dispatch	Max discharging[91]	Max charging[92]	Max charging	Max discharging	Max charging
Other Renewable	Pmax	Pmax	Pmax	Pmax	Pmax
Thermal Generation	Pmax	As needed to balance load	As needed to balance load	As needed to balance load	As needed to balance load
Hydro Generation	Based on historical data	Based on historical data	Based on historical data	Based on historical data	Based on historical data
Import Levels	Historical max flows adjusted to accommodate output from renewable generation as needed				

[90] Forecasted demand levels for peak conditions are in likelihoods (1-in-10 is a 1 in 10 year likelihood) and are based on historical data for off-peak conditions that are then scaled to selected study years.
[91] Maximum steady-state positive output associated with the maximum net output in the Interconnection Request
[92] Maximum steady-state negative output for re-charging of the energy storage facility

BESS follow market dispatch instructions and will be discharged or charged according to system needs. A possible solution to mitigate reliability issues is to dispatch the BESS in a different mode (charging or discharging). However, there are challenges associated with reliance on this capability without knowing detailed information about the SOC of the BESS. Furthermore, experience has shown that the frequency of deep cycling the BESS shortens its lifetime, so BESS should be sized based on expected frequency profile at the POI.

CAISO also performs deliverability assessments[93] as part of the interconnection study process. This includes a deliverability assessment at peak demand for resource adequacy purposes as well as a delivery assessment at off-peak demand to evaluate potential curtailment of intermittent resources (i.e., wind and solar). **Table 5.4** shows the assumptions used in these deliverability assessments.

Table 5.4: Study Assumptions for BESS and Hybrid Resources in Deliverability Assessment

Delivery Assessment	Standalone BESS	AC-Coupled Hybrid	DC-Coupled Hybrid
Peak	4-hr discharging capacity	4-hr discharging capacity with total plant output <= plant pmax	
Off-Peak	Pgen=0 from BESS. Existing BESS or hybrid may be put into charging mode in order to mitigate overload.		

CAISO Transmission Planning Study

Many different power flow and stability studies are conducted when considering the overall annual transmission planning study program. The dispatch of BESS and hybrid plants are set based on the time stamp and assumptions used for each scenario being studied. Production cost simulations are used to determine the appropriate dispatch scenarios for future year cases.

[93] http://www.caiso.com/Documents/IssuePaper-GenerationDeliverabilityAssessment.pdf

Appendix A: Relevant FERC Orders to BESS and Hybrids

The Federal Energy Regulatory Commission (FERC) recently issued orders pertaining to electric storage resources that are relevant to the guidance contained in this reliability guideline. FERC defined an electric storage resource as follows:

- **Electric Storage Resource (FERC Definition):**[94] a resource capable of receiving electric energy from the grid and storing it for later injection of electric energy back to the grid."

FERC's determinations in Order No. 841, Order No. 842, and Order No. 845 are leading to new wholesale market participation models, updates to interconnection studies processes, and new operating practices.

FERC Order No. 841

In Order No. 841[95] (February 15, 2018), FERC required RTOs and ISOs under its jurisdiction to establish participation models that recognize the physical and operational characteristics of electric storage resources. Each participation model, per the order, must "ensure that a resource using the participation model for electric storage resources is eligible to provide all capacity, energy, and ancillary services that it is technically capable of providing in the RTO/ISO markets" and "account for the physical and operational characteristics of electric storage resources through bidding parameters or other means." These ancillary services may include blackstart service, primary frequency response service, reactive power service, frequency regulation, or any other services defined by the RTO/ISO.

The Commission gave flexibility to both transmission providers in determining telemetry requirements as well as to electric storage resources in managing SOC. To the extent that electric storage resources are providing ancillary services, such as frequency regulation, an electric storage resource managing its SOC is required to follow dispatch signals. For ease of reference, the Commission provided a chart of "physical and operational characteristics of electric storage resources for which each RTO's and ISO's participation model for electric storage resources must account," as shown in **Table A.1**. How these characteristics are accounted for in participation models may vary between RTOs and ISOs. Note that these definitions are not endorsed by the NERC IRPWG; rather, they are provided here only as a reference.

Table A.1: FERC Participation Model Parameters

Physical or Operational Characteristic	Definition
State of Charge	The amount of energy stored in proportion to the limit on the amount of energy that can be stored, typically expressed as a percentage. It represents the forecasted starting SOC for the market interval being offered into.
Maximum State of Charge (SOC_{max})	A SOC value that should not be exceeded (i.e., gone above) when a resource using the participation model for electric storage resources is receiving electric energy from the grid (e.g., 95% SOC).[96]
Minimum State of Charge	A SOC value that should not be exceeded (i.e., gone below) when a resource using the participation model for electric storage resources is injecting electric energy to the grid (e.g., 5% SOC).

[94] FERC Order No. 841, paragraph 29.
[95] https://ferc.gov/sites/default/files/2020-06/Order-841.pdf
[96] The IRPWG notes that the base for defining the percentage SOC is not defined and therefore up to interpretation by the ISO/RTO.

Table A.1: FERC Participation Model Parameters	
Physical or Operational Characteristic	**Definition**
Maximum Charge Limit	The maximum MW quantity of electric energy [power][97] that a resource using the participation model for electric storage resources can receive from the grid.
Maximum Discharge Limit	The maximum MW quantity that a resource using the participation model for electric storage resources can inject to the grid.
Minimum Charge Time	The shortest duration that a resource using the participation model for electric storage resources is able to be dispatched by the RTO/ISO to receive electric energy from the grid (e.g., one hour).
Maximum Charge Time	The maximum duration that a resource using the participation model for electric storage resources is able to be dispatched by the RTO/ISO to receive electric energy from the grid (e.g., four hours).
Minimum Run* Time	The minimum amount of time that a resource using the participation model for electric storage resources is able to inject electric energy to the grid (e.g., one hour).
Maximum Run Time	The maximum amount of time that a resource using the participation model for electric storage resources is able to inject electric energy to the grid (e.g., four hours).
Minimum Discharge Limit	The minimum MW output level that a resource using the participation model for electric storage resources can inject onto the grid.
Minimum Charge Limit	The minimum MW level that a resource using the participation model for electric storage resources can receive from the grid.
Discharge Ramp Rate	The speed at which a resource using the participation model for electric storage resources can move from zero output to its Maximum Discharge Limit.
Charge Ramp Rate	The speed at which a resource using the participation model for electric storage resources can move from zero output to its Maximum Charge Limit.

* Note that the definitions here interchange "run" and "discharge." The preferred term is "discharge."

FERC Order No. 842

In Order No. 842[98] (February 15, 2018), the Commission determined that electric storage resources under its jurisdiction are only required to provide primary frequency response (PFR) when they are "online and are dispatched to inject electricity to the grid and/or dispatched to receive electricity from the grid." This excludes situations when an electric storage resource is not dispatched to inject or receive electricity.[99] The Commission required electric storage resources and transmission providers to specify an "operating range for the basis of the provision of primary frequency response." The operating range, the Commission explained, represents the minimum and maximum states of charge between which an electric storage resource must provide PFR. The operating range for each electric storage resource must do the following:

[97] There is a disagreement between units in the FERC definitions. The term "power" is added to note that IRPWG believes this refers to a power term (i.e, MW) and it not intended to be a rate (i.e., MW/sec).

[98] https://cms.ferc.gov/sites/default/files/whats-new/comm-meet/2018/021518/E-2.pdf

[99] As in, electric storage resources are not obligated to provide any frequency response to the BPS if dispatched at 0 MW output. However, the requirements in Order No. 842 are minimum requirements and an electric storage resource may provide this service if the market rules or interconnection requirements are set up to enable this capability. Providing primary frequency response when dispatched at 0 MW could help BPS frequency stability moving forward.

- Be agreed to by the interconnection customer and the transmission provider, in consultation with the balancing authority
- Consider the system needs for primary frequency response
- Consider the physical limitations of the electric storage resource as identified by the developer and any relevant manufacturer specifications
- Be established in Appendix C of the Large Generator Interconnection Agreement (LGIA) or Attachment 5 of the Small Generator Interconnection Agreement (SGIA)

The Commission noted that this suite of requirements "effectively allows electric storage resources to identify a minimum and maximum set point below and above which they will not be obligated to provide primary frequency response comparable to synchronous generation." In summary, the Commission provided electric storage resource interconnection customers with the ability to propose an operating range and the transmission provider or BA the ability to consider system needs for primary frequency response before determining final operating ranges.

Given that "system conditions and contingency planning can change" and that "capabilities of electric storage resources to provide primary frequency response may change due to degradation, repowering, or changes in service obligations," the Commission determined that the ultimate operating ranges may be dynamic values. If a dynamic range is implemented, then transmission providers must also determine the periodicity of reevaluation and the factors that will be considered during reevaluation of the operating ranges. The Commission provided electric storage resources specific exemptions from PFR provision for a "physical energy limitation":

> "the circumstance when a resource would not have the physical ability, due to insufficient remaining charge for an electric storage resource or insufficient remaining fuel for a generating facility to satisfy its timely and sustained primary frequency response service obligation, as dictated by the magnitude of the frequency deviation and the droop parameter of the governor or equivalent controls."

The Commission also clarified that MW droop response is derived from nameplate capacity. If dispatched to charge during an abnormal frequency deviation, the Commission required electric storage resources to meet PFR requirements by increasing (for overfrequency) or decreasing (for underfrequency) the "rate at which they are charging according to the droop parameter." To illustrate, the Commission gave an example of an electric storage resource charging at two MW with a calculated response per the droop parameter to increase real-power output by one MW. According to the Commission, during an underfrequency deviation the electric storage resource could "satisfy its obligation by reducing its consumption by one MW (instead of completely reducing its consumption by the full two MW and then discharging at one MW, which would result in a net of three MW provided as primary frequency response)." Electric storage resources are not required to change from charging to discharging, or vice versa, if technically incapable of doing so during the event when PFR is needed.

The Commission also noted that requirements adopted in Order No. 842 are minimum requirements. An electric storage resource may elect, in coordination with its transmission provider and BA, "to operate in a more responsive mode by using lower droop or tighter deadband settings."

As with all frequency-responsive resources connected to the BPS, speed of response has a significant impact on frequency performance during large disturbances, particularly in low inertia systems with high ROCOF. FERC Order No. 842 does not prescribe any speed of response characteristics for electric storage resources. See **Chapter 1** for more details on how the performance of BESS and hybrid plants can be configured to support BPS frequency response needs.

FERC Order No. 845

In Order No. 845[100] (April 19, 2018), the Commission clarified that "in certain situations, electric storage resources can function as a generating facility, a transmission asset, or both." The Commission made clear that electric storage resources under its jurisdiction that are greater than 20 MW had the option to interconnect pursuant to the Large Generator Interconnection Procedures and LGIA "so long as they meet the threshold requirements as stated in those documents." In the event the LGIA does not accommodate for the load characteristics of electric storage resources, transmission providers may enter into non-conforming LGIAs.

Furthermore, in Order No. 845, the Commission declined to move forward with "any requirements for modeling electric storage resources":

> "…given the limited experience interconnecting electric storage resources and the abundant desire for regional flexibility, we are not imposing any standard requirements at this time and instead continue to allow transmission providers to model electric storage resources in ways that are most appropriate in their respective regions."

Instead, the Commission encouraged transmission providers to continue to consider modeling approaches that will "save costs and improve the efficiency of the interconnection process."

FERC Order No. 845-A

In Order No. 845-A[101] (February 21, 2019), the Commission reiterated that Order No. 845 allows electric storage resources to interconnect pursuant to the LGIP and LGIA but declined to impose requirements on how transmission providers study the load characteristics of electric storage resources. Instead, the Commission clarified that transmission providers "have the flexibility to address the load characteristics of electric storage resources" within studies, including studies of electric storage resource load characteristics and studies of the upgrades required to accommodate electric storage resource load characteristics. Furthermore, the Commission stated that transmission providers may enter into non-conforming LGIAs "when necessary" in order to accommodate a particular electric storage resource.

[100] https://www.ferc.gov/sites/default/files/2020-04/E-2_47.pdf
[101] https://ferc.gov/sites/default/files/2020-06/Order-845-A.pdf

Contributions

NERC gratefully acknowledges the invaluable contributions and assistance of the following industry experts in the preparation of this guideline. NERC also would like to acknowledge all the contributions of the NERC IRPWG.

Name	Entity
Mark Ahlstrom	NextEra Energy
Hassan Baklou	San Diego Gas and Electric
Fernando Benavides	Southern California Edison
Leo Bernier	AES
Sudipto Bhowmik	Burns & McDonnell
Jeff Billo (IRPWG Vice Chair)	Electric Reliability Council of Texas
Doug Bowman	Southwest Power Pool
Rajni Burra	REPlantSolutions
Hung-Ming Chou	Dominion Energy
Kevin Collins	First Solar
Nicolas Compas	Hydro Quebec
Gary Custer	SMA America
Cole Dietert	Electric Power Engineers
Ransome Egunjobi	Lower Colorado River Authority
Evangelos Farantatos	Electric Power Research Institute
Roberto Favela	El Paso Electric Company
Lou Fonte	California ISO
Vahan Gevorgian	National Renewable Energy Laboratory
Michael Goggin	Grid Strategies
Irina Green	California ISO
Andy Hoke	National Renewable Energy Laboratory
Warren Hess	Midcontinent ISO
Kaitlyn Howling	Invenergy
Shun-Hsien (Fred) Huang	Electric Reliability Council of Texas
Henry Huang	Pacific Northwest National Laboratory
Andrew Isaacs	Electranix
Himanshu Jain	National Renewable Energy Laboratory
Prashant Kansal	Tesla
Venkat Konala	Urban Grid
Dan Kopin	Utility Services
Timothy Kopp	Electric Power Engineers
Sergey Kynev	Siemens
Chester Li	Hydro One
Andrew Lopez	Southern California Edison
Sudip Manandhar	Southern Company
Adam Manty	American Transmission Company
Brad Marszalkowski	ISO New England
Julia Matevosyan	Electric Reliability Council of Texas
Hugo Mena	Electric Power Engineers
Nihal Mohan	Midcontinent ISO
Danny Musher	Key Capture Energy
David Narang	National Renewable Energy Laboratory
Om Nayak	NAYAK Corporation
Siddharth Pant	General Electric

Name	Entity
Manish Patel	Southern Company
David Piper	Southern California Edison
Bill Quaintance	Duke Energy Progress
Deepak Ramasubramanian	Electric Power Research Institute
Matthew Richwine	Telos Energy
Mark Robinson	AES
Fabio Rodriguez	Duke Florida
Michael Ropp	Sandia National Laboratory
Thomas Schmidt Grau	Vestas
Al Schriver (IRPWG Chair)	NextEra Energy
Jay Senthil	Siemens PTI
Alexander Shattuck	Vestas
Lakshmi Srinivasan	Lockheed Martin
Khundmir Syed	Burns & McDonnell
Sirisha Tanneeru	Xcel Energy
Chue Thor	Sacramento Municipal Utility District
Farhad Yahyaie	Powertech Labs
Billy Yancey	Electric Power Engineers
Songzhe Zhu	California ISO
Rich Bauer (IRPWG Coordinator)	North American Electric Reliability Corporation
Stephen Coterillo	North American Electric Reliability Corporation
Hongtao Ma	North American Electric Reliability Corporation
Ryan Quint (IRPWG Coordinator)	North American Electric Reliability Corporation