NERC
NORTH AMERICAN ELECTRIC RELIABILITY CORPORATION

Lesson Learned

Line Frequency Excursion Causes UPS Shutdown and Control Center Evacuation

Primary Interest Groups

Transmission Operators (TOPs) Transmission Owners (TOs) Balancing Authorities (BAs)
Reliability Coordinators (RCs) Distribution Providers (DPs) Generator Operators (GOPs)
Generator Owners (GOs)

Problem Statement

A control center was evacuated due to automatic shutdown of transmission switching and generation dispatcher SCADA workstations and system operation center servers. This shutdown was caused by a frequency excursion on the primary source transmission line that was feeding the control center.

Details

The control center's 115 kV primary source frequency spiked to 65Hz due to events in a neighboring entity's system. The control center's uninterruptible power supplies (UPS-1 and UPS-2) went into hardware shutdown and bypassed due to internal settings that limited acceptable input frequency to a range of 57 to 63 Hz to protect the UPS's front end. Because there was no loss of voltage, the UPS did not change to its battery for its source of power.

With UPS-1 and UPS-2 bypassed, the high frequency from the primary source fed directly to the critical bus. SCADA workstations and other computer equipment energized from the critical bus shutdown when their associated power supplies tripped to protect them. However, business servers and HVAC units remained connected to the critical bus on bypass power. System operations personnel observed the frequency spike just before their workstations shut down. Refer to the diagram on following page for more information.

Because there was no sensed loss of external voltage, emergency diesel generators were not required to auto-start as designed. The control center switched over to its 12.5 kV secondary source following the operation of backup protection on the primary source's transformer. The UPSs remained bypassed and would not pick up critical bus load. Control center personnel evacuated to their alternate control center. The BA maintained monitoring and control functions during the transition.

After some troubleshooting, a logic issue was discovered. The UPSs internal logic would not allow them to pick up load immediately when energized to protect the UPS from feeding a large surge load. The secondary source maintaining the remaining critical bus load (business servers and HVAC) via the UPS bypassed, and this prevented the UPS from returning to normal service. After this internal logic was discovered, all load was powered off. With all load removed, the UPSs were restarted and critical bus load was added slowly, ultimately restoring the control center on secondary source power to the UPSs.

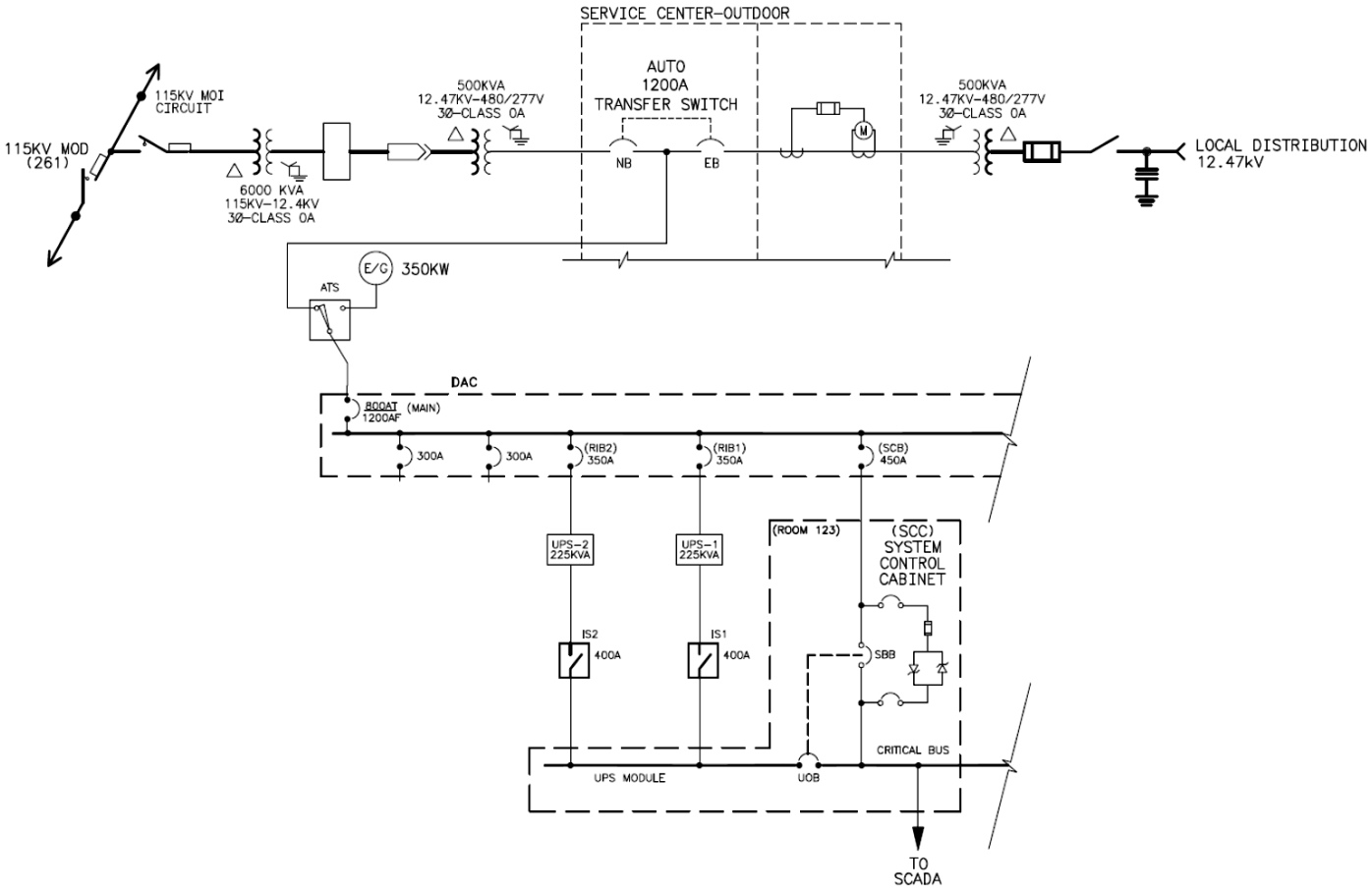

Corrective Actions

- While it would have been possible to turn the SCADA workstations and other computer equipment back on with the UPSs in bypass by using unfiltered secondary source power, this would have put the equipment at risk.
- After control center power has been switched to a known good source (secondary source, batteries, or the diesel generators), turn off all loads fed from the UPS bypass and then bring the UPSs back on. This is the recovery option that was actually used and would have taken less time than evacuating to the alternate control center if the issue had been known previously. Be aware that sometimes UPS logic is set up to require associated batteries be near full charge and an external power source be available before an off-line UPS can be restarted.
- The optimal fix is to prevent power source excursions (frequency hi/low, voltage hi/low) from defeating UPS power in the first place. This may be done by setting up protection and controls to switch input power to another source prior to exceeding one of the UPS front-end protection logic set points. This was the long-term solution chosen by the control center's owner.
- Alternatively, the UPS vendor may provide an option to have the UPS logic changed to switch loads to battery power until an acceptable power source is available instead of simply going into bypass.

Lessons Learned

The primary lesson learned is that despite having four sources of power available (i.e., a primary source transmission line, a secondary source distribution line, emergency diesel generators, and UPS batteries), a control center evacuation was initiated due to a transient on the in-service source due to UPS settings that did not anticipate these conditions.

There is reason to believe this vulnerability may not be unique to the control center involved in this event and could be present in other important applications that use UPS power (such as data centers and generating station control rooms), giving this lesson learned broad applicability.

Entities need to ensure they understand their UPS settings, their UPS' limitations, and how to recover from various potential failure scenarios.

Also see Lessons Learned 20151001 "Loss of EMS Due to RTU LAN and UPS Failure" for another UPS failure scenario.

NERC's goal with publishing lessons learned is to provide industry with technical and understandable information that assists them with maintaining the reliability of the bulk power system. NERC requests that you provide input on this lesson learned by taking the short survey provided in the link below.

Click here for: Lesson Learned Comment Form

For more Information please contact:

NERC – Lessons Learned (via email)	WECC Event Analysis (via email) or (801) 883-6859
Source of Lesson Learned:	Western Electricity Coordinating Council
Lesson Learned #:	20170502
Date Published:	May 16, 2017
Category:	Communications

This document is designed to convey lessons learned from NERC's various activities. It is not intended to establish new requirements under NERC's Reliability Standards or to modify the requirements in any existing Reliability Standards. Compliance will continue to be determined based on language in the NERC Reliability Standards as they may be amended from time to time. Implementation of this lesson learned is not a substitute for compliance with requirements in NERC's Reliability Standards.